ERIC GARCETTI
MAYOR

Date: November 13, 2020

To: Honorable Members of the Los Angeles City Council

From: Mayor Eric Garcetti EG

Subject: Status Report on the Development of a Regional Solicitation Platform (C.F. 19-0078)

Summary

At a special meeting of the Ad Hoc Committee on Comprehensive Job Creation Plan on May 29, 2020, the Committee recommended that Council adopt the recommendation to request the Chief Procurement Officer (CPO) to work with ITA and BCA to develop the strategy to replace the City's current solicitation system, the Los Angeles Business Assistance Virtual Network (LABAVN). The goals for the new system are to improve local business participation, facilitate better cybersecurity, and be a next-generation business engagement platform to meet the dynamic needs of the Los Angeles region. In addition, the system will be critical to supporting the following efforts related to procurement initiatives, management, and reform:

- Providing critical procurement metrics and reporting to:
  - Provide for data-driven decisions
  - Generate equity contracting analytics
- Centralizing procurement systems through the Angeleno Account interface to:
  - Link eight systems that manage procurement activities
  - Digitize the City's certification process and create a centralized database for regional business certifications
  - Centralize procurement data for both general funded and proprietary departments
- Improving transparency in opportunities and contracting to:
  - Display a user-friendly system interface with a uniform structure for procurement opportunities
  - Centralize all City contracts and vendor dashboards to manage awarded contracts
- Harnessing procurement opportunities for local economic growth to:
  - Host a regional clearinghouse of public and private opportunities for the region
  - Enable virtual vendor networking, and robust prime sub matchmaking

    - Promote jobs and economic recovery through visible opportunities
- Streamlining procurement processes internally and externally to:
    - Remove redundancies in procurement and contracting activities
    - Assist departments in administrative burdens in light of staff reductions
    - Leverage purchasing across departments, thereby better positioning the City during negotiation of terms and costs

Public-Private Partnership
This effort has received large amounts of support and participation from the public and private sectors (see attachment). The CPO Team led two task forces, one composed of internal City departments and one of various businesses, ranging from small to large, from real estate developers, sports and entertainment, to business leaders and advocacy organizations such as the Los Angeles Business Council, LA Coalition, and the Los Angeles Area Chamber of Commerce. Though input was received from these initial groups, the discussions around future development and policy will continue with other groups as well.

Costs
Due to budget constraints, ITA took the lead in optimizing resources for this project and is currently further negotiating with Salesforce. This is by lowering the number of licenses needed for the development of Phase 1, which will bring down the cost for this Fiscal Year (FY 20-21). For future years, the cost of the licenses will increase to reflect the full year of utilization; however, it is expected that the costs will be reduced through the fee study being conducted by the City Administrative Officer.

Recommendation
Note and File in as much as this report is a status update to the project development that was approved by the Council and Mayor.

Fiscal Impact Statement
There is no immediate General Fund impact as funding for the first year has been identified. However, the funding for this fiscal year was through a loan from the Board of Public Works Trust Fund, which will need repayment over three fiscal years. Additional funding will be required to maintain the licenses necessary for the new system. The overall cost to the general fund may be offset by the fees collected from regional users of the platform, which is currently being evaluated through a fee study by the City Administrative Officer.

Attachments:
Requirements for Phase One of Regional Solicitation Platform Development
Recommended Workflow for Procurement Operations
Presentation of the New System

FORM GEN 160

CITY OF LOS ANGELES

INTER-DEPARTMENTAL CORRESPONDENCE

Date: October 30, 2020

To: Ted Ross, General Manager, Information Technology Agency
Joyce Edson, Executive Officer, Information Technology Agency

From: Shannon Hoppes, Chief Procurement Officer, Mayor's Office of Budget and Innovation

Subject: Requirements for Phase One of Regional Solicitation Platform Development

Summary:

Pursuant to Council File (C.F.) 19-0078, the Chief Procurement Officer (CPO), Information Technology Agency (ITA), and the Bureau of Contact Administration (BCA) were assigned to design and develop a new regional solicitation and City procurement platform to replace the Los Angeles Business Assistance Virtual Network (LABAVN). The goals of the Mayor and City Council is to position procurement as a tool for economic development, recovery, job creation, equity through contracting. This effort will support large scale City and regional events such as the 2026 World Cup and the 2028 Olympic and Paralympic Games. In response, the CPO, with participation from ITA and BCA, created two task forces, one composed of City Department representatives, and one composed of external business leaders, to create a comprehensive development strategy to address both public and private sector needs. This memo outlines the workflows, modules, and system requirement recommended by the task forces for a new procurement and solicitation system, resulting in a cloud-hosted platform that will improve local business participation, create a clearing house for regional public and private opportunities, develop a business-to-business network infrastructure, provide better cyber security, address equity through contracting, generate comprehensive procurement and contracting reports, and become the next-generation business engagement platform to meet the dynamic needs of the Los Angeles region.

This report is the first of a series of developmental reports, and future reports may revise or update any information presented in this report. The following presumptions have been made in the writing of this report: current funding and staffing available for the development of the project will not change, future allocation of resources will be continuous and ongoing, and both the CPO and ITA will remain the lead on the development of this system. Additionally, technical modifications may be made to future reports due to system development outcomes.

Background:

LABAVN was first established in 2003 as a cutting edge bulletin board for City solicitation opportunities. As the City's contracting infrastructure and needs expanded, LABAVN has undergone substantial modifications. However, a technical review of LABAVN determined that, if it is to accommodate the development and expansion needed to support regional procurement, system improvements are no longer enough. The City of Los Angeles requires an underlying technology platform replacement for LABAVN. With upcoming large-scale events taking place in Los Angeles in the coming decade, a modern solicitation platform will provide tremendous benefit to the L.A. region. This will require an easy-to-use interface, capacity for complex workflows, and robust cybersecurity of which the current

LABAVN technology was never planned to perform and cannot currently provide. After conducting a competitive process, the ITA established City standards for customer relationship management (CRM) software. Through this process and subsequent analysis, ITA determined that Salesforce would be the most robust, scalable, easy to use, and cost effective technology software for this new regional procurement portal.

With continued funding and resources, the ITA estimates LABAVN's initial functions can be developed by ITA staff within six to eight months, with longer term build outs and functions over the following two years. The estimated cost for the initial implementation is $996,286, with ongoing annual costs to be included in the future City budget. On June 10, 2020, the Los Angeles City Council adopted the recommendations of the Ad Hoc Committee on Comprehensive Job Creation Plan, as amended, to incorporate funding sources for the new platform.

Overview:

Task Force on the Development of a Regional Solicitation System

The task force on the Regional Solicitation Platform is composed of companies recommended by the Los Angeles Business Council, the Los Angeles Area Chamber of Commerce, the Los Angeles Coalition on Jobs and the Economy, and the Valley Economic Alliance. The task force was created and invited to advise on the development of a Regional Solicitation System, as it was identified by the Mayor and City Council that the greatest impact to small and local businesses would be to replatform LABAVN to become a clearinghouse for regional opportunities comprised of both private sector and government opportunities. The composition of the task force reflects various industries such as construction, architectural design, staffing and employment specialists, sports and entertainment, commercial banking, real estate, and a mix of small businesses. The participants are:

AECOM
AEG
Aszkenazy Development, Inc.
CD Tech
City National Bank
CMG Alliance
Express Employment Professionals, Inc
Gaines & Stacey, LLP
Greater LA African American Chamber of Commerce
Inclusive Action
LA Area Chamber of Commerce
Los Angeles Business Council
LA Rams
Mercury Air Group
Opportunity Fund
Parker Brown, Inc.
The LA Coalition
Tierney Management
Trammell Crow Company
UltraGlas, Inc.

Task Force on the Development of the City of Los Angeles Procurement System

The task force on the Development of the City Procurement System is composed of City Department contracting and procurement experts. The task force recommended processes to digitize and automate pre-contract processes as the City of Los Angeles uses the Financial Management System (FMS) for post-contract purchasing, but does not have a centralized procurement system for pre-contract processes that impact local businesses. As part of the re-platforming of LABAVN using the Salesforce cloud-based platform, the City has the opportunity to create a customized and fully integrated system that would allow Departments to track, manage, and organize contract opportunities and solicitation

efforts. By centralizing the procurement system, the City's contracting can be better coordinated across Departments, creating increased opportunities to leverage the City's overall spend and reducing administrative lag time between contracts. The task force additionally finds the need for the new system to provide contracting and expenditure data that was not previously captured in LABAVN. The demographic breakdown of City contractors and vendors is currently not captured, therefore, by expanding the vendor profile to allow for vendors to self disclose and be granted easy access to certification programs, the new system will be able to provide more insight to the demographic breakdown of City contractors. Due to the complexity of the procurement and contracting process, the task force was further divided into Subcommittees to streamline internal processes. The Subcommittees were tasked to provide input on optimal process improvements and increasing efficiency, thereby, resulting in a shorter procurement process. The following pages are the notes taken from the Subcommittee meetings.

Phase 1 Development: Regional Solicitation Platform - System Name TBD

As discussed, the first phase of development should prioritize the transfer of current LABAVN functions onto Salesforce and expand the access to allow for the private sector/other municipalities to post their opportunities. This feature will increase regional transparency and awareness to both opportunities and the diverse and expanded pools of contractors and subcontractors. In addition, the new platform should take advantage of more robust vendor profiles to provide a more streamlined and tailored experience for the vendor community. The profile will hold key information such as business certifications, qualifications, and previously awarded contracts with the City, to provide detailed business networking information. For companies looking to work with the City, the new platform should provide digitized procurement forms that will auto populate information from the business profiles to simplify their bidding process and reduce errors.

The system should also include policy changes to the City's Business Inclusion Program (BIP) as detailed below. The system will also allow for bilateral communication so that businesses can use the business profiles to communicate with each other. Specifications for timing and deadlines for prime and subcontractors will be further developed and analyzed by the CPO and BCA. Follow-up and subsequent reports will provide additional details that are not provided in this report.

Phase 2 Development: Comprehensive Digital Procurement System

The second phase of development will focus on the digitization of City processes including a digital contract approval process for City construction and personal services contracts, and additional enhancements to business profile. This phase will enhance the existing purchasing and financial controls in the FMS system, and also address the lack of a standardized process for City procurement opportunities (services and construction). This phase aims to create a repository for all City to provide a digital resource to reduce duplication of efforts across Departments and operational delays. For that reason, the task force has recommended that the system be developed to house a solicitation and contract management platform, contract approval workflow manager; including, but not limited to, the approval and evaluation processes by the Office of the Mayor, City Council, City Administrative Officer, and the Personnel Department. In addition to workflows and standardization, the vendor profile system will be enhanced through the use of natural language algorithms and machine learning to better provide a virtual avenue for meeting potential business partners. The recommendations for each aspect of the

contract is outlined in the findings below. A subsequent report confirming the details of the Phase 2 development will be provided after the completion of Phase 1 development.

Phase 3 Development: Vendor Expenditure Module and Business Resources
A subsequent report outlining the details of the Phase 3 development will be provided after the completion of Phase 2 development.

Phase 4 Development: Features Listed Not Reviewed by Task Forces
A subsequent report may be drafted with system requirements that were discovered to be required to develop for the end-to-end procurement system that was not discussed by the task forces.

Conclusion from Findings from Task Force Meetings:

The task forces have identified the priorities of the City's needs to ensure that the development of this new system will provide the biggest impact to the procurement process. The recommendations and process changes provided by the task force were adapted to a flow chart attached to this report. The priorities of development have been broken down into three distinct phases of development. The following is a recommended timeline for the development of the features and functions discussed in the task force meetings:

Recommended System Development Timeline
Requested estimated completion of full system development three years from the roll out of Phase 1 in January 2021, barring any unforeseen factors that may impede development.

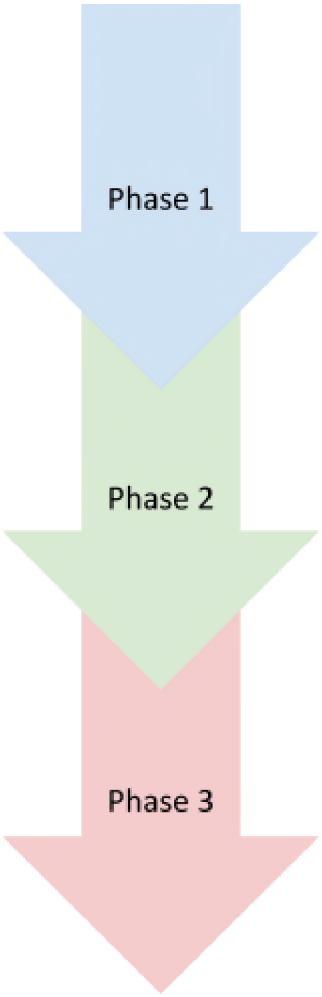

Phase 1 Development: Regional Solicitation System
Roll out expected: Jan 2021

- Re-platforming of LABAVN's current functions
- Auto-filling of documents and forms
- Enhanced business profiles and matchmaking
- Regional access

Phase 2 Development: Comprehensive Digital Procurement System

- Centralized repository for all City contracts
- Digitized City solicitation creation
- Expanded use of City-wide contracts
- Enhanced procurement analytics

Phase 3 Development: Expanded Enhancement of Digital Resources

- User interface for vendors to submit invoices, which integrates with the City's financial and purchasing systems
- Analytics around City contracted expenses

- Create up-to-date contract balances
- Digital resources for contractors and subcontractors
- Bid evaluation module

Current LABAVN Capabilities

- Citywide Procurement Solicitation Website
  - All-City procurement solicitations are posted on LABAVN
  - Solicitations and related documents are attached as a PDF to the opportunity
- Vendor Registration and Intake Portal
  - Collection of business information
  - Intake of the paper-based certification process
  - Basic NAICS code identification
- City of Los Angeles Certification Portal and Automated Business Inclusion Program (BIP) Outreach
  - Houses over 5000 firms with certifications
  - Can display the 13 different certifications available by the City

Summary of Development

- All current LABAVN functionalities
  - Fully electronic certification workflow
- Enhanced vendor profile and single ID sign-on
  - City of Los Angeles Pre-Qualification
    - Repository for licenses, bonding information, and professional qualifications
    - Front-load required contracting and procurement information and update as needed
    - Enhanced visibility on previously awarded RFQs to streamline procurement
  - Data-driven vendor opportunity matching
  - Opportunity matching based on vendor information and preferences
  - Enhanced algorithmic networking between both prime and subcontractors
  - Enhanced NAICS Code/natural language
    - New platform coding will allow for enhanced algorithmic outreach based off of NAICS code and natural language query
- Agile business applications development for procurement
  - Easier to change processes as policies change
- Solicitation Clearinghouse for Regional Use
  - Centralized Clearinghouse for Regional Procurement Solicitations
    - The ability for public and private agencies to participate in a solicitation
    - Minimal cost to participants
    - Networking between primes and subs
  - Centralized Regional Vendor Profile and Certification Repository
    - Prequalification for agencies by the collection of standardized business information
    - Profile for business information and capabilities
    - Central location for vendor business identification, information, licenses, bonding, and certifications
  - Regional Business Resources
    - Posting board and portal to access municipal business programs, certifications, and access to financial assistance educational resources
- Updates and modifications to the Business Inclusion Program (BIP)

- Changes outlined below under development notes

Meeting Notes:

Subcommittee on the Notice of Intent Process and Forecasting
July 21, 2020

Participants:

Shannon Hoppes, CPO	Melissa Velasco, CAO	Chris Lastra, ITA
Andrew Choi, CPO	Terra Messina, CAO	Anne Phu, ITA
Daniel Cho, CPO	Jeremy Stout, ITA	Christina Gomez, Animal Services
Jessica Lopez, CPO	Nicolas Chou, ITA	

No. of Departments: 4
No. of Participants: 11

Summary: On July 21, 2020, the task force for the Development of the City's Procurement System, Subcommittee on the Notice of Intent (NOI) Process and Forecasting held a meeting to discuss the digitization of the NOI process. The NOI is used to inform the employee labor unions that the City is intending to contract with a private entity to perform services. The Subcommittee reviewed the current process and identified two major factors. First, if there are any changes to the way the unions are currently being notified, there may be a need to renegotiate the process with the unions. The display and formatting of data should be discussed with the unions. Second, if the NOIs are going to be used to forecast the City's spending, Departments should begin the NOI process with their budgets. For projects that have already been budgeted, the NOI would provide information for prospective vendors to expect upcoming opportunities.

Features for Development

1. Allow Departments to determine the levels of internal approvals on documents.

2. Tracking the lifecycle of the documents for both internal and inter-Departmental review.

3. Allow for the creation of all documents independently, but connected to the opportunity.

4. Ability to copy previous documents to use as templates.

Development Priority: Phase 2 Development

Subcommittee on the 1022 Evaluation Process
July 22, 2020

Participants:

Shannon Hoppes, CPO	Melissa Velasco, CAO	Anne Phu, ITA
Andrew Choi, CPO	Jeremy Stout, ITA	Lauren Nakasuji, LAFD
Daniel Cho, CPO	Nicolas Chou, ITA	Mike Qiang Yu, BPW
Jessica Lopez, CPO	Chris Lastra, ITA	Jeff Brill, City Clerk
		Paul Nakama, EWDD

No. of Departments: 7
No. of Participants: 13

Summary: On July 22, 2020, the task force on the Development of the City's Procurement System, Subcommittee on the Charter Section 1022 Evaluation Process held a meeting to discuss the digitization of the 1022 Evaluation Process. Charter Sec. 1022 requires the City to make a determination, "that the work can be performed more economically or feasibly by independent contractors than by a City employee." The current process is for the Personnel Department to complete a Contract Review Report and email it to the CAO and the requesting Department. The following items are considered for the development: once Personnel completes their evaluation and determination of which classifications can perform the work, an automated ticket/message is created and sent to the DCCs of the Departments with that classification using an active directory. Departments with the classes identified in the report will be informed of the request and are given five working days to respond. If the Departments do not respond to the request, the system will indicate the request as nonresponsive, and consider it as a "no" to the request.

Features for Development

1. Connect to an employee database to identify Departments with classifications, Personnel to determine which classes are capable of completing the work.

2. Auto generate outreach efforts, and allow for Departments to respond. Non response equates to a "no" response.

3. Allow for the Personnel Department to create a Contract Review Report through the system.

4. After the outreach is complete, the awarding agency and CAO will be notified of the Department's outreach. If a Department indicates an ability to do the work, the process is completed.

Follow-up: Discuss with Personnel the digitization of the 1022 Evaluation Process. Allow for Personnel to determine approval levels and policy application.

Development Priority: Phase 2 Development

Subcommittee on the ED3 Contracting Process
July 22, 2020

Participants:

Shannon Hoppes, CPO	Jeremy Stout, ITA	James Aceron, LAPD
Andrew Choi, CPO	Nima Asiri, ITA	Sandra Lopez, ITA
Daniel Cho, CPO	Chris Lastra, ITA	Tigran Avetisyan, CTD
Jessica Lopez, CPO	Christina Gomez, Animal Services	Zach De Course, DBS
Melissa Velasco, CAO		Robert Feld, Rec and Parks

No. of Departments: 8
No. of Participants: 14

Summary: On July 22, 2020, the task force for the Development of the City's Procurement System, Subcommittee on the ED3 Contract Approval Process held a meeting to discuss the digitization of the process.The discussion was focused on the Departments' experience with ED3 and using technology to assist with simplifying and creating transparency into the approval process. Each Department was asked to provide their key challenges with ED3. The largest and most consistent difficulty the committee discussed was understanding the status of their requests or knowing who to contact to get necessary information. Other features that should be included is the ability to request a waiver to ED 3 (with justification) through the system when completing the agreement.

Features for Development

1. Work/approval tracker to identify where the ED 3 evaluation is, either with CAO, Mayoral policy shop, or in queue for review.

2. Ability to request an ED 3 waiver within the system, including a justification as to why the ED 3 waiver is needed.

3. Ability for the Department to amend and resubmit for review and track communications between Mayor/CAO/Department.

4. Ability for the system to determine if ED 3 will be required for amended contracts, contract extensions, and Task Order Solicitations (TOS) to RFQ benches.

Follow-up: Discuss with the CAO the possible automation and reporting features for ED 3. Further discuss with CAO the current method and present possible changes to the information sharing and collecting. Identify interaction of ED 3 with other processes, including TOS approval and contract amendments. Additional development meeting to be scheduled.

Subcommittee on Ethics Forms
July 22, 2020

Participants:

Shannon Hoppes, CPO	Jeremy Stout, ITA	Lauren Nakasuji, LAFD
Andrew Choi, CPO	Nima Asiri, ITA	Sandra Lopez, ITA
Daniel Cho, CPO	Chris Lastra, ITA	Karyn Son, LADWP
Jessica Lopez, CPO	Nicholas Chou, ITA	Quinnette McLeod, LAWA
Lisa Ishimaru, Ethics	James Aceron, LAPD	

No. of Departments: 7
No. of Participants: 14

Summary: On July 22, 2020, the task force on the Development of the City's Procurement System, Subcommittee on Ethics Forms held a meeting to discuss the digitization of the legally mandated Ethics forms. The discussion was chaired by both the CPO and the Ethics Commission. The Subcommittee discussed the automation of the two types of Ethics filings: 1) Ethics forms required by bidders and vendors, and 2) Ethics forms that are required by the heads of each Department. The Subcommittee identified that the current documentation process for both types of Ethics forms could be automated due to the fact that the majority of the information is already available throughout the bidding and contracting process. Additionally, while Ethics forms are required for a bidding application, a failure to submit Ethics forms does not disqualify the bid. Therefore, to ensure the Ethics forms are submitted with accuracy and completeness, the system should digitize the forms and collect relevant information from the vendor profiles and bid summary fields.

Features for Development

1. Allow for the form creation and finalization during the bidding process, and for forms to be generated from information in the vendor's business profile.

2. Expand the system so that the Ethics forms can be created in the system for contracts that have not gone through the bidding process.

3. Allow for City staff to develop the quarterly GM report to Ethics through the system based on the contracts and data housed in the system (Phase 2).

Follow-up: Work with Ethics to review all Ethics forms and identify the fields that can be pulled from the business profile, and fields that require manual input.

Development Priority: Phase 1 Development; item 3, Phase 2

Subcommittee on the Business Inclusion Program Process
July 22, 2020

Participants:

Shannon Hoppes, CPO	Sophy Tzeng, BCA	Mike Qiang Yu, BPW
Andrew Choi, CPO	Jeremy Stout, ITA	Tigran Avetisyan, Convention
Daniel Cho, CPO	Nima Asrir, ITA	Karyn Son, DWP
Jessica Lopez, CPO	Nicolas Chou, ITA	Jason Valencia, Planning
Lynda McGlinchy, BCA	Chris Lastra, ITA	Ashia Villegas, Controller
	Anne Phu, ITA	Eve LaDue, Mayor

No. of Departments: 9
No. of Participants: 17

Summary: On July 22, 2020, the task force on the Development of the City's Procurement System, Subcommittee on the Business Inclusion Program (BIP) held a meeting to discuss the impact of BIP to the procurement process. Through a survey to the task force, BIP was identified to be the most frustrating aspect of the procurement process, due to limited understanding of how to advise bidders on the status of their BIP completion. Additionally, the Subcommittee did not believe that BIP was effectively diversifying businesses, especially since the current technology did not effectively track information that would verify the effectiveness of the program. The current process of having each prospective prime use the system to send out emails to any and all prospective subcontractors is creating both spam and confusion. Subcontractors have also stated that they are unable to effectively identify subcontracting opportunities due to the overwhelming amount of information being emailed to them.

Features for Development

1. Redesign the current process within the parameters created by the Executive Directive to allow for outreach/communication to be driven by both subcontractors and prime contractors.

2. Allow companies to subscribe to notifications by NAICS codes, key words, companies, and City Departments.

3. Allow for subcontractors to submit their offers to prime contractors through the system.

4. Track the subcontractors who were selected by the prime contractors, along with the evaluations and determinations of why the prime contractor did not select a specific subcontractor.

5. Determine if BIP is required at the 1022 Evaluation Process.

The Subcommittee concluded that having the prime contractors be solely responsible for the communication with subcontractors was not effectively generating the expected impact. Improving transparency through the system of the prospective prime contractors and allowing proposed

subcontractors to reach out to the prime contractors would reduce process requirements of the prime contractors and the information overload to the subcontractors. The following is a simplified workflow of the current process and proposed process:

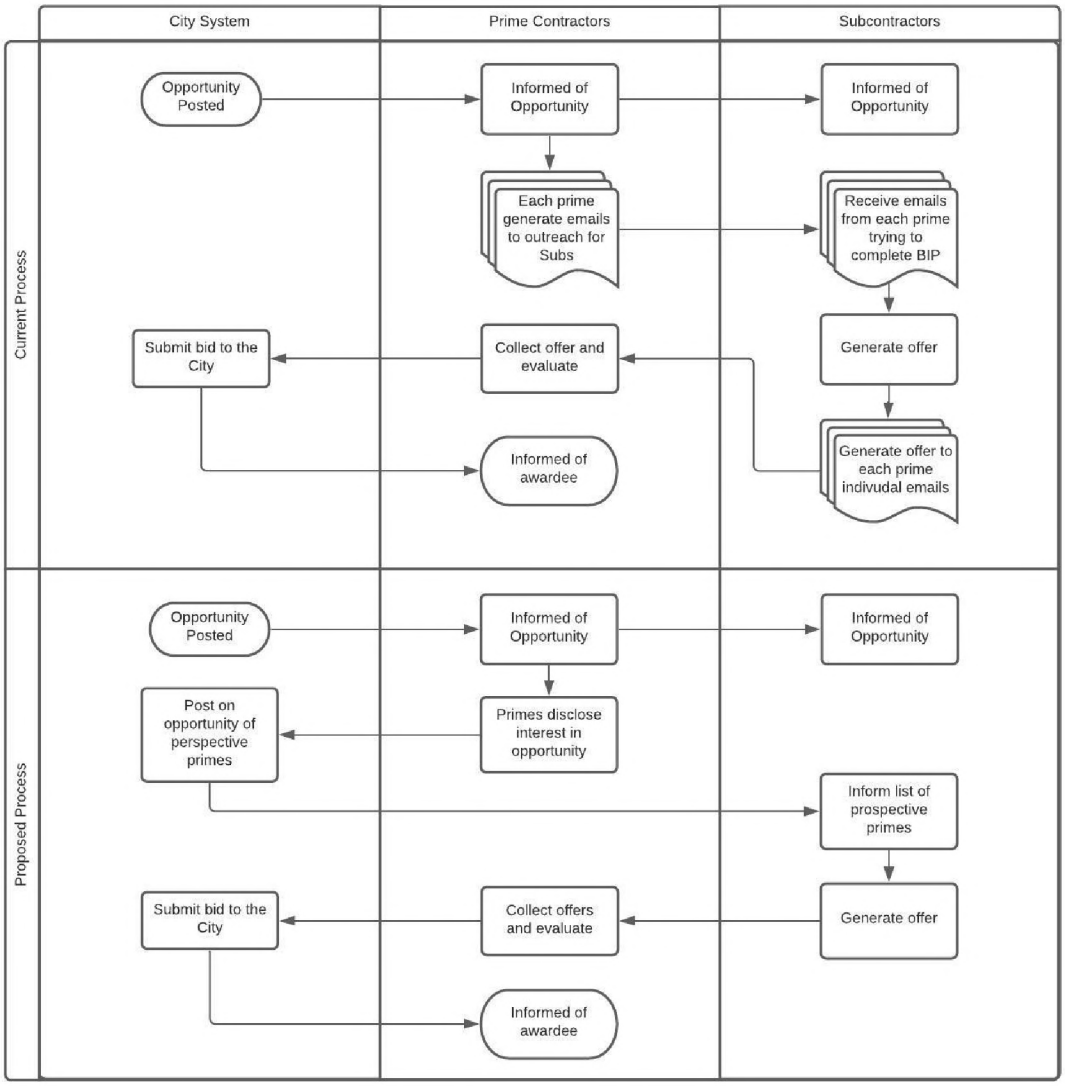

Development Priority: Phase 1 Development

Subcommittee on the Opportunity Posting, Bid Submissions, and Bid Evaluation
July 22, 2020

Participants:

Shannon Hoppes, CPO	Nicolas Chou, ITA	Paul Nakama, EWDD
Andrew Choi, CPO	Chris Lastra, ITA	Karyn Son, DWP
Daniel Cho, CPO	Anne Phu, ITA	Lisa Ishimaru, Ethics
Jessica Lopez, CPO	Christina Gomez,	Ashia Villegas, Controller
Jeremy Stout, ITA	Animal Services	Felicia Ansley, Ports
Nima Asrir, ITA	Mike Qiang Yu, BPW	Gregg Vandergriff, BOE

No. of Departments: 10
No. of Participants: 17

Summary: On July 22, 2020, the task force on the Development of the City's Procurement System, Subcommittee on the Opportunity Posting, Bid Submissions, and Bid Evaluation held a meeting to discuss the digitization of the bid process. It was identified, during this current crisis, all Departments have moved to accepting electronic bids via email. Therefore, transitioning to scanned/computer generated documents submission would create only a minor impact. If anything, the most important aspect of the bidding process is the bid evaluation, and creating templates so that the key information can be easily found. The biggest impact to the process would be digitizing the bid creation and the bid evaluation processes.

Features for Development

1. After Departments post the opportunities, prospective vendors may submit their bids electronically. During the bidding process, the vendors will create a bid summary sheet.

2. The summary sheet should provide key information to simplify the evaluation process.

3. Further development to be discussed at future meetings.

Follow-up: Due to the complexity of this subject matter, the Subcommittee will schedule a follow up meeting.

Development Priority: Phase 1 Development

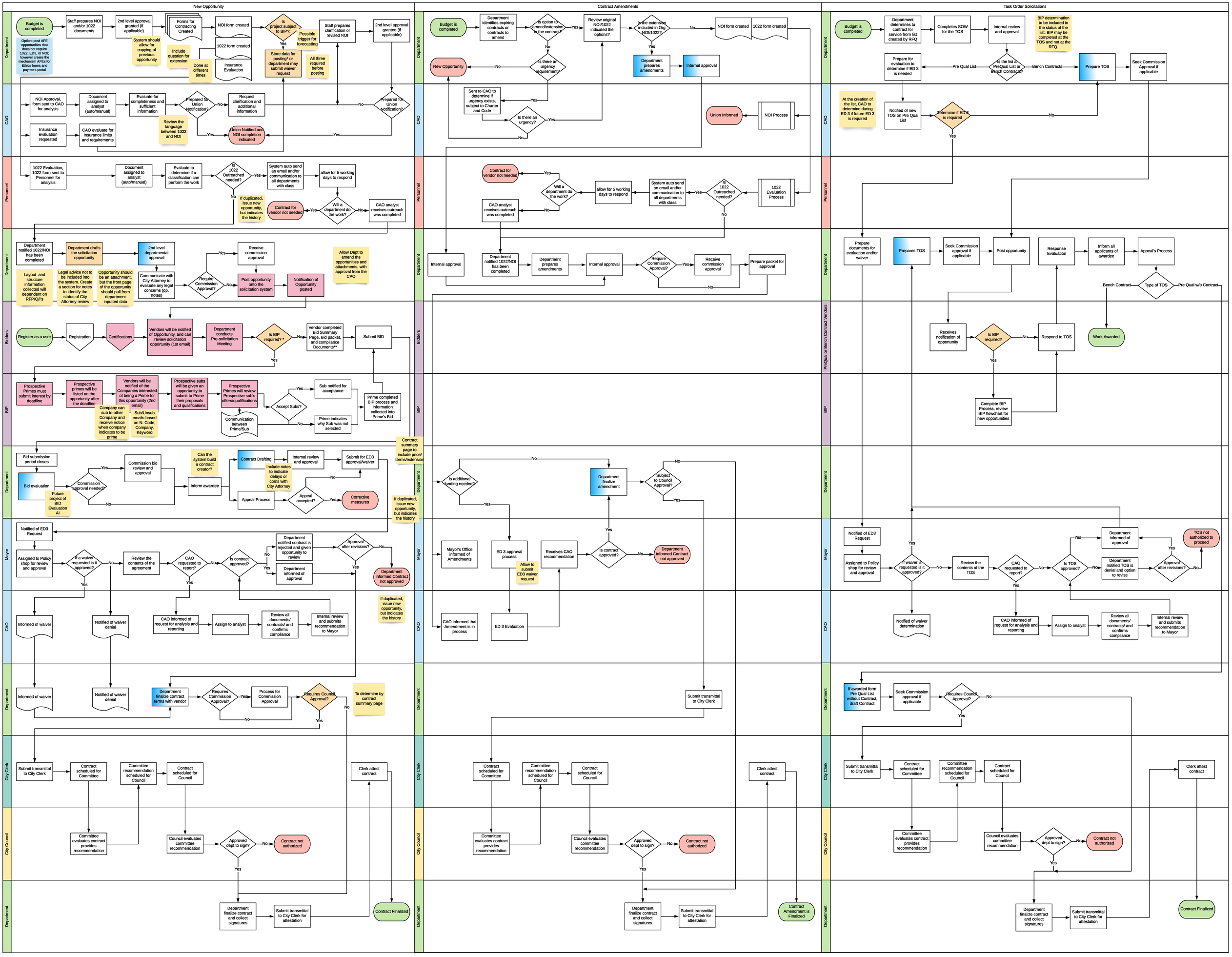
New Opportunity
Contract Amendments
Task Order Solicitations
Department
CAO
Personnel
Bidders
BIP
Mayor
City Clerk
City Council
PreQual or Bench Contract Vendors
Budget is completed
Staff prepares NOI and/or 1022 documents
2nd level approval granted (if applicable)
Forms for Contracting Created
NOI form created
1022 form created
Insurance Evaluation
Is project subject to BIP?:
Staff prepares clarification or revised NOI
2nd level approval granted (if applicable)
Option: post AFE opportunities that does not require 1022, EDI, or NOI; however create the mechanism AFEs for Ethics forms and payment portal
System should allow for copying of previous opportunity
Include question for extension
Done at different times
Store data for posting* or department may submit waiver request
All three required before posting
Possible trigger for forecasting
NOI Approval, form sent to CAO for analysis
Document assigned to analyst (auto/manual)
Evaluate for completeness and sufficient information
Prepared for Union Notification?
Request clarification and additional information
Prepared for Union Notification?
Insurance evaluation requested
CAO evaluate for Insurance limits and requirements
Review the language between 1022 and NOI
Union Notified and NOI completion indicated
1022 Evaluation, 1022 form sent to Personnel for analysis
Document assigned to analyst (auto/manual)
Evaluate to determine if a classification can perform the work
Is 1022 Outreached needed?
System auto send an email and/or communication to all departments with class
allow for 5 working days to respond
Will a department do the work?
Contract for vendor not needed
CAO analyst receives outreach was completed
If duplicated, issue new opportunity, but indicates the history
Department notified 1022/NOI has been completed
Department drafts the solicitation opportunity
2nd level departmental approval
Communicate with City Attorney to evaluate any legal concerns (op. notes)
Require Commission Approval?
Receive commission approval
Post opportunity onto the solicitation system
Notification of Opportunity posted
Allow Dept to amend the opportunities and attachments, with approval from the CPO
Layout and structure information collected will dependent on RFP/QI/Ts
Legal advice not to be included into the system. Create a section for notes to identify the status of City Attorney review
Opportunity should be an attachment, but the front page of the opportunity should pull from department inputted data
Register as a user
Registration
Certifications
Vendors will be notified of Opportunity, and can review solicitation opportunity (1st email)
Department conducts Pre-solicitation Meeting
Is BIP required? *
Vendor completed Bid Summary Page, Bid packet, and compliance Documents**
Submit BID
Prospective Primes must submit interest by deadline
Prospective primes will be listed on the opportunity after the deadline
Vendors will be notified of the Companies interested of being a Prime for this opportunity (2nd email)
Prospective subs will be given an opportunity to submit to Prime their proposals and qualifications
Prospective Primes will review Prospective sub's offers/qualifications
Accept Subs?
Sub notified for acceptance
Prime indicates why Sub was not selected
Communication between Prime/Sub
Prime completed BIP process and information collected into Prime's Bid
Company can sub to other Company and receive notice when company indicates to be prime
Sub/Unsub emails based on N. Code, Company, Keyword
Contract summary page to include price/ terms/extension
Bid submission period closes
Bid evaluation
Commission approval needed?
Commission bid review and approval
Future project of BID Evaluation AI
Can the system build a contract creator?
Inform awardee
Contract Drafting
Internal review and approval
Submit for ED3 approval/waiver
Include notes to indicate delays or coms with City Attorney
Appeal Process
Appeal accepted?
Corrective measures
If duplicated, issue new opportunity, but indicates the history
Notified of ED3 Request
Assigned to Policy shop for review and approval
If a waiver requested is it approved?
Review the contents of the agreement
CAO requested to report?
Is contract approved?
Department notified contract is rejected and given opportunity to review
Department informed of approval
Approval after revisions?
Department informed Contract not approved
Informed of waiver
Notified of waiver denial
CAO informed of request for analysis and reporting
Assign to analyst
Review all documents/ contracts/ and confirms compliance
Internal review and submits recommendation to Mayor
If duplicated, issue new opportunity, but indicates the history
Informed of waiver
Notified of waiver denial
Department finalize contract terms with vendor
Requires Commission Approval?
Process for Commission Approval
Requires Council Approval?
To determine by contract summary page
Submit transmittal to City Clerk
Contract scheduled for Committee
Committee recommendation scheduled for Council
Contract scheduled for Council
Clerk attest contract
Committee evaluates contract provides recommendation
Council evaluates committee recommendation
Approved dept to sign?
Contract not authorized
Department finalize contract and collect signatures
Submit transmittal to City Clerk for attestation
Contract Finalized
Budget is completed
Department identifies expiring contracts or contracts to amend
Is option to amend/extension in the contract?
Review original NOI/1022 indicated the options?
Is the extension included in Orig NOI/1022?
NOI form created
1022 form created
New Opportunity
Is there an urgency requirement?
Department prepares amendments
Internal approval
Sent to CAO to determine if urgency exists, subject to Charter and Code
Is there an urgency?
Union Informed
NOI Process
Contract for vendor not needed
Will a department do the work?
allow for 5 working days to respond
System auto send an email and/or communication to all departments with class
Is 1022 Outreached needed?
1022 Evaluation Process
CAO analyst receives outreach was completed
Internal approval
Department notified 1022/NOI has been completed
Department prepares amendments
Internal approval
Require Commission Approval?
Receive commission approval
Prepare packet for approval
Is additional funding needed?
Department finalize amendment
Subject to Council Approval?
Mayor's Office informed of Amendments
ED 3 approval process
Allow to submit ED3 waiver request
Receives CAO recommendation
Is contract approved?
Department informed Contract not approved
CAO informed that Amendment is in process
ED 3 Evaluation
Submit transmittal to City Clerk
Contract scheduled for Committee
Committee recommendation scheduled for Council
Contract scheduled for Council
Clerk attest contract
Committee evaluates contract provides recommendation
Council evaluates committee recommendation
Approved dept to sign?
Contract not authorized
Department finalize contract and collect signatures
Submit transmittal to City Clerk for attestation
Contract Amendment is Finalized
Budget is completed
Department determines to contract for service from list created by RFQ
Completes SOW for the TOS
Internal review and approval
BIP determination to be included in the status of the list. BIP may be completed at the TOS and not at the RFQ.
Prepare for evaluation to determine if ED 3 is needed
Pre Qual List
Is the list a PreQual List or Bench Contracts?
Bench Contracts
Prepare TOS
Seek Commission Approval if applicable
At the creation of the list, CAO to determine during ED 3 if future ED 3 is required
Notified of new TOS on Pre Qual List
Determine if ED 3 is required
Prepare documents for evaluation and/or waiver
Prepares TOS
Seek Commission approval if applicable
Post opportunity
Response Evaluation
Inform all applicants of awardee
Appeal's Process
Bench Contract
Type of TOS
Pre Qual w/o Contract
Receives notification of opportunity
Is BIP required?
Respond to TOS
Work Awarded
Complete BIP Process, review BIP flowchart for new opportunities
Notified of ED3 Request
Assigned to Policy shop for review and approval
If waiver is requested is it approved?
Review the contents of the TOS
CAO requested to report?
Is TOS approved?
Department informed of approval
Department notified TOS is denial and option to revise
Approval after revisions?
TOS not authorized to proceed
Notified of waiver determination
CAO informed of request for analysis and reporting
Assign to analyst
Review all documents/ contracts/ and confirms compliance
Internal review and submits recommendation to Mayor
If awarded form Pre Qual List without Contract, draft Contract
Seek Commission approval if applicable
Requires Council Approval?
Submit transmittal to City Clerk
Contract scheduled for Committee
Committee recommendation scheduled for Council
Contract scheduled for Council
Clerk attest contract
Committee evaluates contract provides recommendation
Council evaluates committee recommendation
Approved dept to sign?
Contract not authorized
Department finalize contract and collect signatures
Submit transmittal to City Clerk for attestation
Contract Finalized

City of Los Angeles: Next Gen Procurement System

Shannon Hoppes, Chief Procurement Officer
Mayor's Office of Budget and Innovation

Eric Garcetti
#lamayor

THANK YOU

Los Angeles City Council
Hannah Levien, Council District 2
Board of Public Works Commissioners
Public Works Bureau of Contract Admin.
Economic Workforce Development Dept
Information Technology Agency
Los Angeles Business Council
Los Angeles Area Chamber of Commerce
LA Coalition
Valley Economic Alliance
Members of this Phase 1 Taskforce

THE LANDSCAPE

- Procurement is the 2nd largest spend after payroll
- The City spends ~4.7B each year
- The City creates ~3,600 RFIs/RFQs/RFPs each year

THE PROBLEM

- The City has not optimized procurement processes and thereby loses purchasing efficiencies
- The City does not have a modern database that can provide metrics for policymakers
- Over the years, the City has created siloed procurement databases

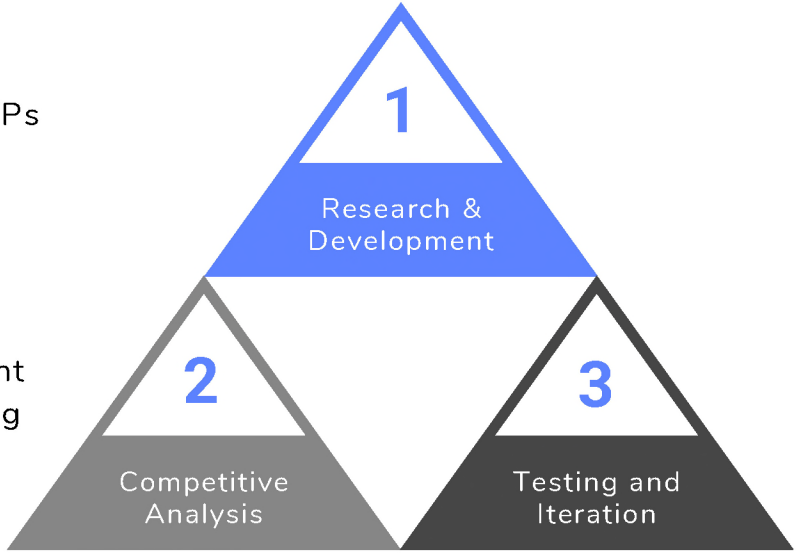

ACTION STEPS

Create Advisory Taskforces

Development Report to ITA

Testing and Training

Two Taskforces have been created, one composed of City Department representatives, and one composed of external business leaders, to advise on the comprehensive development strategy for a new regional solicitation and City procurement system.

Taskforces on the Development

Taskforce on the Development of a Regional Solicitation System

AECOM
AEG
Aszkenazy Development, Inc.
CD Tech
City National Bank
CMG Alliance
Express Employment Professionals, Inc
Gaines & Stacey, LLP
Greater LA African American Chamber of Commerce
Inclusive Action
LA Area Chamber of Commerce
Los Angeles Business Council
LA Rams
Mercury Air Group
Opportunity Fund
Parker Brown, Inc.
The LA Coalition
Tierney Management
Trammell Crow Company
UltraGlas, Inc.

Taskforce on the Development of the City of Los Angeles Procurement System

Aging, Los Angeles World Airports, Animal Services, Office of the City Attorney, Building & Safety, Cannabis Regulation, City Administrative Officer, Office of the Clerk, Contract Administration Bureau, Office of the City Controller, Convention & Tourism Development, Cultural Affairs, Department on Disability, Economic & Workforce Development, Emergency Management Department, Engineering Bureau, Office of Finance, Fire, General Services Department, Housing + Community Investment, Housing Authority, Information Technology Agency, Library, Neighborhood Empowerment, Fire & Police Pensions, Personnel Department, City Planning, Police, Port of Los Angeles, Public Works, Recreation & Parks, LACERS, Sanitation, Street Lighting, Street Services, Transportation, Water & Power, Zoo

Pain Points

- Eight independently developed systems manages procuremnt
- Approximatly 54 paper forms required for contracting
- Limited visibility in the procurement and contracting process
- Contracting and procurment data is limited and not easily collected
- Procurement policies are enforced on a ad hoc basis

ACTION STEPS

Create Advisory Taskforces

Development Report to ITA

Testing and Training

The CPO Team, in partnership with the Taskforces, drafted a system requirements report which included a workflow that encompasses all current and new features for the solicitation and procurement system.

Pain Points

- Eight independently developed systems manages procuremnt
- Approximatly 54 paper forms required for contracting
- Limited visibility in the procurement and contracting process
- Contracting and procurment data is limited and not easily collected
- Procurement policies are enforced on a ad hoc basis

- Centralized procurement systems through Angeleno Account
- Digitized documents and operations for bidding, approval, and review
- Transparent procurement activities for approval process
- Create a data lake to house all procurement activities and contracts
- House all procurement ordinances and policies

THE NEW PROCUREMENT SYSTEM

Function Overview

- Fully modernized and digitized procurement process
- Flexible and secure system with an evolving development strategy
- Updated outreach method in accordance with changes to the Business Inclusion Program
  - Creating a marketplace for Business Inclusion Program
- Enhanced vendor profile and single ID sign-on
- Centralized solicitation clearinghouse for regional use
- Centralized contracting and payment database
- Real-time and holistic contracting and purchasing data
- Centralized regional vendor profile and certification repository
- Increased compliance without added manual and administrative processes
- A regional resource for small, local, minority-, and women-owned businesses

Digitize procurement procedures and documents
Create a centralized database through Angeleno Account
Onboarding and training
Review for further centralization and integration

Limitation of Current System

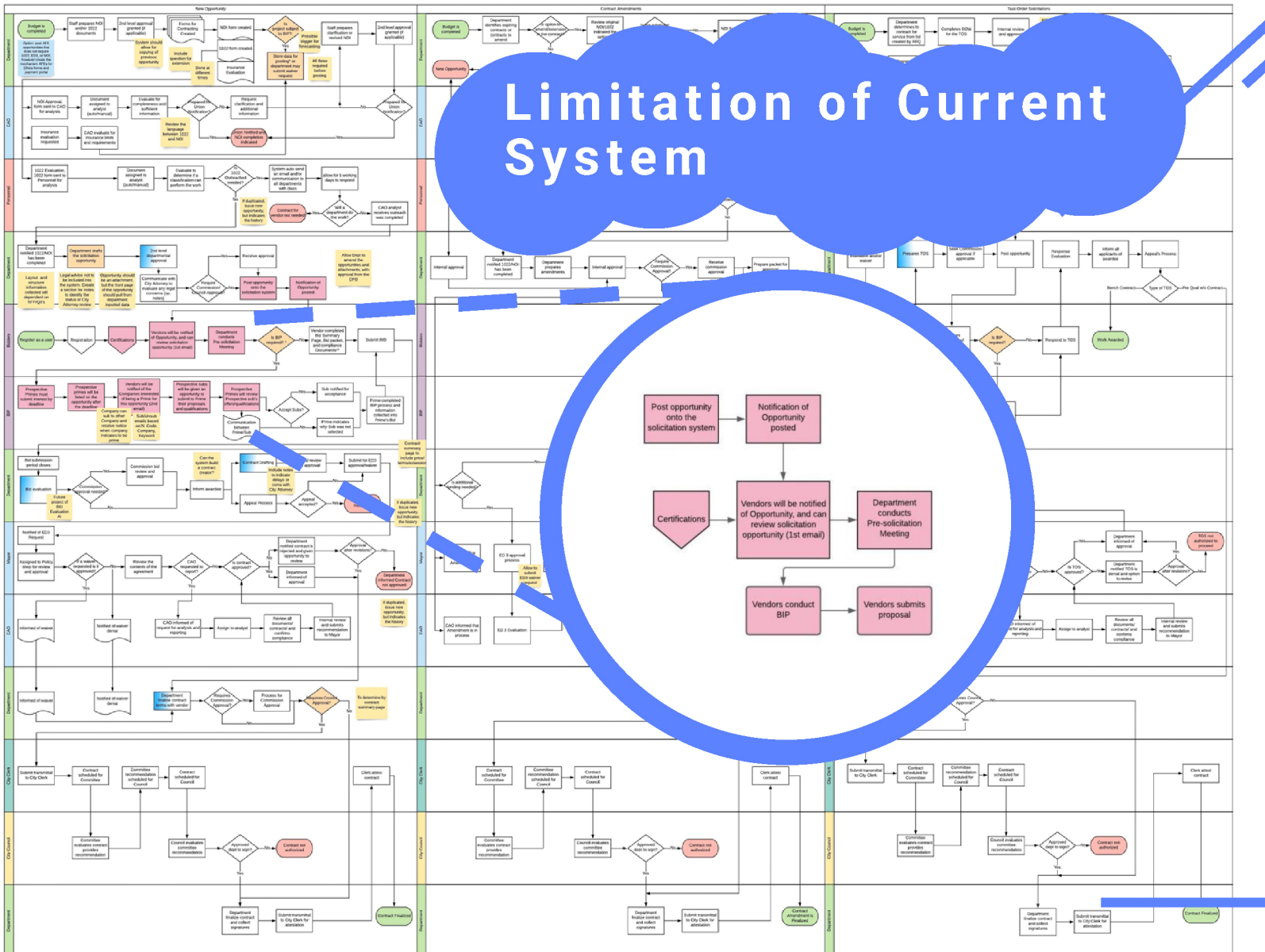

ACTION STEPS

Create Advisory Taskforces

Development Report to ITA

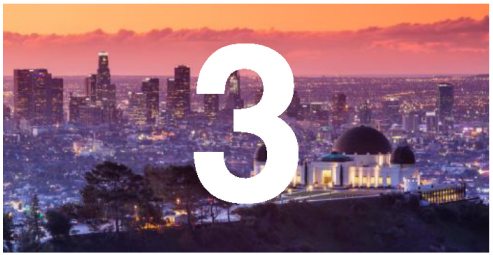

Testing and Training

The CPO Team created a timeline for the replatforming of the current system and the additions of new features and modules identified by the Taskforces. Each Phase will include continuous improvement and development. Expanded availability to the private sector and other partnering agencies is expected in Jan 2021.

Phase 1

Phase 1 Development: Regional Solicitation System
Roll out expected: Jan 2021

- Re-platforming of LABAVN's current functions
- Auto-filling of documents and forms
- Enhanced business profiles and matchmaking
- Regional access

Phase 2

Phase 2 Development: Comprehensive Digital Procurement System

- Centralized repository for all City contracts
- Digitized City solicitation creation
- Expanded use of City-wide contracts
- Enhanced procurement analytics

Phase 3

Phase 3 Development: Expanded Enhancement of Digital Resources

- User interface for vendors to submit invoices, which integrates with the City's financial and purchasing systems
- Analytics around City contracted expenses

Q&A

CPOTeam@lacity.org