DEPARTMENT OF RECREATION AND PARKS

BOARD OF COMMISSIONERS

RENATA SIMRIL
PRESIDENT

LUIS SANCHEZ
VICE PRESIDENT

FIONA HUTTON
MARIE LLOYD
BENNY TRAN

TAKISHA SARDIN
BOARD SECRETARY
(213) 202-2640

City of Los Angeles
California

KAREN BASS
MAYOR

JIMMY KIM
GENERAL MANAGER

MATTHEW RUDNICK
EXECUTIVE OFFICER

CATHIE SANTO DOMINGO
ASSISTANT GENERAL MANAGER

CHINYERE STONEHAM
ACTING ASSISTANT GENERAL MANAGER

BRENDA AGUIRRE
ASSISTANT GENERAL MANAGER

(213) 202-2633

August 1, 2024

Honorable City Council
City of Los Angeles
c/o: Office of the City Clerk
City Hall, Room 395

Honorable Members of the City Council:

Subject:

Chatsworth Park North And Chatsworth Park South – Grant of Easements to the Las Virgenes Water District for Water Pipeline – Categorical Exemption from the Provisions of the California Environmental Quality Act (CEQA) Pursuant to Article 19, Section 15301 [Operation, Repair, Maintenance, Permitting, Leasing, Licensing, or Minor Alteration of Existing Public or Private Structures, Facilities, Mechanical Equipment, or Topographical Features, Involving Negligible or No Expansion of Existing or Former Use] and Section 15303(d) [Construction of Water Main, Sewage, Electrical, Gas, and Other Utility Extensions, Including Street Improvements, of Reasonable Length to Serve Such Construction] of California CEQA Guidelines and Article III, Section 1, Class 1(14) and Class 3(5) of City CEQA Guidelines

Recommendation for Mayor and Council Action:

The Board of Recreation and Park Commissioners (Board) respectfully requests the City Council authorize the Department of Recreation and Parks (RAP) (i) approve the use of portions of the Chatsworth Park North and Chatsworth Park South for the installation, operation, and maintenance of water pipelines by the Las Virgenes Municipal Water District (LVMWD) as part of its Twin Lakes Pump Station Pipeline Project (Project); and; (ii) Grant non-exclusive permanent easements (Easements) to LVMWD on portions of Chatsworth Park North and Chatsworth Park South; and, (iii) adopt the Resolution, substantially in the form attached (Attachment 3), approving the granting of Easements to LVWMD

Background:

Chatsworth Park North is located at 22300 W. Chatsworth Street in the Chatsworth community of the City. This 24.15-acre facility provides multipurpose fields, a basketball court, and a children's play area for the use of the local community. Due to the facilities, features, programs, and services it provides, Chatsworth Park North meets the standard for a Community Park, as defined in the City's Public Recreation Plan.

Chatsworth Park South is located at 22360 W. Devonshire Street in the Chatsworth area of the City. This 73.07-acre park provides a variety of services and amenities to the community, including a recreation center, play area, and outdoor open space. Additionally, the Minnie Hill Palmer House I Homestead Acre, City of Los Angeles Historic-Cultural Monument #113, is located at this site. Due to the facilities, features, programs, and services it provides, Central Recreation Center meets the standard for a Community Park, as defined in the City's Public Recreation Plan.

Las Virgenes Municipal Water District (LVMWD) provides potable water and wastewater treatment services to residents of Agoura Hills, Calabasas, Hidden Hills, Westlake Village and adjacent unincorporated areas of Los Angeles County including the Santa Monica Mountains and Chatsworth. LVMWD has served the Chatsworth community since 1966, before it was annexed into the City in 1987, and continues to serve the Chatsworth community today. LVMWD is requesting the Easements from RAP to provide for its growing community's water needs, which includes City residents in the Chatsworth community.

Fiscal Impact Statement:

Approval of this Report will have no impact on RAPS's General Fund.

If you have any questions with regard to the aforementioned matters, please contact Rick Tonthat, Sr. Management Analyst, Planning, Maintenance and Construction Branch at (213) 202-2608.

Very truly yours,

BOARD OF RECREATION AND
PARK COMMISSIONERS

Takisha Sardin

TAKISHA SARDIN
Commission Executive Assistant II

Attachments: Board Report No. 24-173

cc: Rick Tonthat, Sr. Management Analyst, Planning, Maintenance and Construction Branch

APPROVED
August 01 2024
BOARD OF RECREATION
AND PARK COMMISSIONERS

BOARD REPORT **NO.** 24-173

DATE August 01, 2024 C.D. 12

BOARD OF RECREATION AND PARK COMMISSIONERS

SUBJECT: CHATSWORTH PARK NORTH AND CHATSWORTH PARK SOUTH – GRANT OF EASEMENTS TO THE LAS VIRGENES WATER DISTRICT FOR WATER PIPELINE – CATEGORICAL EXEMPTION FROM THE PROVISIONS OF THE CALIFORNIA ENVIRONMENTAL QUALITY ACT (CEQA) PURSUANT TO ARTICLE 19, SECTION 15301 [OPERATION, REPAIR, MAINTENANCE, PERMITTING, LEASING, LICENSING, OR MINOR ALTERATION OF EXISTING PUBLIC OR PRIVATE STRUCTURES, FACILITIES, MECHANICAL EQUIPMENT, OR TOPOGRAPHICAL FEATURES, INVOLVING NEGLIGIBLE OR NO EXPANSION OF EXISTING OR FORMER USE] AND SECTION 15303(d) [CONSTRUCTION OF WATER MAIN, SEWAGE, ELECTRICAL, GAS, AND OTHER UTILITY EXTENSIONS, INCLUDING STREET IMPROVEMENTS, OF REASONABLE LENGTH TO SERVE SUCH CONSTRUCTION] OF CALIFORNIA CEQA GUIDELINES AND ARTICLE III, SECTION 1, CLASS 1(14) AND CLASS 3(5) OF CITY CEQA GUIDELINES

B. Aguirre	_____	M. Rudnick	_____
B. Jones	_____	for * C. Santo Domingo	DF
C. Stoneham	_____	N. Williams	_____

9/h

General Manager

Approved X Disapproved _____ Withdrawn _____

RECOMMENDATIONS

1. Approve the use of portions of the Department of Recreation and Parks' (RAP) Chatsworth Park North and Chatsworth Park South for the installation, operation, and maintenance of water pipelines by the Las Virgenes Municipal Water District (LVMWD) as part of its Twin Lakes Pump Station Pipeline Project (Project);

2. Grant non-exclusive permanent easements (Easements) to LVMWD on portions of Chatsworth Park North and Chatsworth Park South for the installation, operation, and maintenance of water pipelines, in the form substantially as set forth in Attachment 1 of this Report (Agreement) and as described in the Summary of this Report;

3. Adopt the Resolution, substantially in the form attached (Attachment 3), approving the granting of Easements to LVWMD;

4. Direct the Board of Recreation and Park Commissioners (Board) Secretary to transmit the related documents to the City Attorney for review and approval and to the City Council for approval;

5. Direct RAP staff to request the assistance of the Department of General Services (GSD) and the City Attorney's Office to draft, process, and execute all required documentation necessary to grant the Easements to LVMWD, including the Easement Deed in the form substantially as set forth in Attachment 2 of this Report;

6. Upon receipt of the necessary approvals, authorize the Board President and Secretary to execute the Agreement and transmit said executed documents to LVMWD for recordation;

7. Authorize the removal of two Coast Live Oaks in Chatsworth Park North, as well as the removal of limbs from other adjacent Coast Live Oaks, and mandate the replacement of such trees in accordance with the RAP Tree Preservation Policy and Urban Forestry Program, as may be amended;

8. Determine that the proposed Project is categorically exempt from the provisions of the California Environmental Quality Act (CEQA) pursuant to Article 19, Section 15301 [Operation, repair, maintenance, permitting, leasing, licensing, or minor alteration of existing public or private structures, facilities, mechanical equipment, or topographical features, involving negligible or no expansion of existing or former use] and Section 15303(d) [Construction of water main, sewage, electrical, gas, and other utility extensions, including street improvements, of reasonable length to serve such construction] of California CEQA Guidelines and Article III, Section 1, Class 1(14) and Class 3(5) of City CEQA Guidelines and direct staff to file a Notice of Exemption (NOE) with the Los Angeles County Clerk and the California Office of Planning and Research;

9. Authorize RAP's Chief Accounting Employee or designee to prepare a check to the Los Angeles County Clerk in the amount of $75.00 for the purpose of filing an NOE; and,

10. Authorize RAP staff to make technical corrections as necessary to carry out the intent of this Report.

SUMMARY

Chatsworth Park North is located at 22300 W. Chatsworth Street in the Chatsworth community of the City. This 24.15-acre facility provides multipurpose fields, a basketball court, and a children's play area for the use of the local community. Due to the facilities, features, programs, and services it provides, Chatsworth Park North meets the standard for a Community Park, as defined in the City's Public Recreation Plan.

Chatsworth Park South is located at 22360 W. Devonshire Street in the Chatsworth area of the City. This 73.07-acre park provides a variety of services and amenities to the community, including a recreation center, play area, and outdoor open space. Additionally, the Minnie Hill

Palmer House I Homestead Acre, City of Los Angeles Historic-Cultural Monument #113, is located at this site. Due to the facilities, features, programs, and services it provides, Central Recreation Center meets the standard for a Community Park, as defined in the City's Public Recreation Plan.

Las Virgenes Municipal Water District (LVMWD) provides potable water and wastewater treatment services to residents of Agoura Hills, Calabasas, Hidden Hills, Westlake Village and adjacent unincorporated areas of Los Angeles County including the Santa Monica Mountains and Chatsworth. LVMWD has served the Chatsworth community since 1966, before it was annexed into the City in 1987, and continues to serve the Chatsworth community today. LVMWD is requesting the Easements from RAP to provide for its growing community's water needs, which includes City residents in the Chatsworth community.

REQUEST FOR EASEMENTS FOR PROJECT

The Twin Lakes Pump Station Project (Project) has been in development since 2015 for the purpose of supplementing the water flow to its pump station. This pump station is located within a fee-owned property, but the property surrounding it is owned by RAP (Chatsworth Park South). LVMWD's existing pipeline for that pump station could not be improved for this purpose as it would require extensive lead and arsenic remediation. Thus, this Project would construct a new pipeline that would go through eleven properties owned by the State of California, Metropolitan Water District (MWD), LVMWD, Los Angeles County, and RAP (Chatsworth Parks North and South). This new pipeline would: (i) meet Waterworks Standard horizontal distance requirement between utilities; (ii) not impede access to Los Angeles County Flood Control District's Santa Susana Storm channel; and (iii) protect in place as many of the City's trees as possible. LVMWD has done its due diligence and has shown that this is the most viable path for its pipeline to take (Attachment 4).

LVWMD currently has eight existing easements from RAP for its old pipeline through Chatsworth Park South. However, these easements do not cover all the current scope LVMWD is proposing with the Project. LVMWD would also need new easements to cover the different path that the Project's new pipeline will take through Chatsworth Parks North and South. LVMWD had a third-party independent appraiser conduct an Independent Appraisal Report, which GSD then reviewed. GSD concurred with the Independent Appraisal Report's findings, valuing the easements and properties at a total of $6,500.00 (Attachment 5). LVMWD has prepared a proposed Agreement (Attachment 1) and Easement Deed (Attachment 2) outlining the payment of $6,500 to RAP as consideration in full for the real property interests being conveyed.

LVMWD has stated that the Twin Lakes Pump Station as it currently stands does not have the volume of water needed to support future population growth, and that if water is not supplemented, the area would be potentially starving of water in the upcoming years. The Project's new pipeline would directly benefit City residents in LVMWD, which – according to the District – services eighty-seven multi-family, seven residential, and four commercial service connections within the City.

TREES AND SHADE

LVMWD and its contractors prepared a Protected Tree Report (Tree Report), identifying a total of 56 protected trees, as defined in the City of Los Angeles Tree Preservation Ordinance No. 177404, that may be affected by the Project, 33 of which are located within Chatsworth Park North. Based on the Project's pipeline alignment, two California Sycamores and two Coast Live Oaks will need to be completely removed. Several Coast Live Oaks will also need to have limbs removed to allow for construction clearance. The two California Sycamores will not need mitigation planting because they are declining and mostly dead as of 2019. However, the two Coast Live Oaks being removed in their entirety and the various limbs that will be removed from other Coast Live Oaks will require mitigation planting in accordance with the RAP Tree Preservation Policy and Urban Forestry Program. All four trees to be completely removed are located in Chatsworth Park North (Attachment 6).

Tree protection recommendations from the Tree Report include pruning trees to allow for adequate clearance, installing protective fencing, tunneling beneath the root zone of one Coast Live Oak, and having the project arborist monitor the site when the fencing is installed and when trenching occurs within the dripline of the trees.

A Tree Mitigation Plan has not yet been prepared, since such a plan requires accurate measurements. As such, the healthy trees being removed and the branches that need to be removed for clearance will be measured closer to when they will actually be removed. A Tree Mitigation Plan will be prepared after said measurement and before work begins.

LVWMD and its contractors also prepared a Rare Plant Survey (Plant Survey) as per the requirements of the Santa Susana State Historic Park. RAP's Chatsworth Park South was included in the scope of this Plant Survey since it is located along the southern edge of the western section of the proposed pipeline alignment through Santa Susana State Historic Park (Attachment 4). The Plant Survey found that the Project Area has a high potential suitability for one statewide rare plant species, the Santa Susana tarplant, but that the species was not observed within the Project Area. Because the Santa Susana tarplant was observed 130-150 feet north of the Project Area, the Plant Survey determined that there is likely to be no direct or indirect effects on this species. Seven other special status plants also have the potential to occur within the project site, but none were observed during the Plant Survey (Attachment 7).

ENVIRONMENTAL IMPACT

The proposed Project consists of a permanent easement and a temporary construction easement to construct a water line, and qualifies as licensing and minor alterations to existing topographic features and construction of water main extensions.

According to the parcel profile report retrieved on July 16, 2024, this area is partially located in a liquefaction zone, but the construction of this Project will not create conditions that could lead to liquefaction. This site is not within a coastal, methane, or historic zone, so there is no reasonable possibility that the proposed Project may impact on an environmental resource of hazardous or critical concern. The proposed Project will require the removal of several trees. Removed trees

will be replaced according to RAP's Urban Forestry Manual or protected in place. In compliance with the Migratory Bird Treaty Act and California Fish and Game Code Sections 3503 and 3503.5, tree removal activities would take place outside of the nesting bird season (February 1 to September 1) to the extent feasible. In accordance with these regulatory requirements, efforts would be made to schedule removal of mature trees between September 2 and January 31 to avoid the nesting bird season. If activities were to occur during the nesting bird season all suitable habitats would be thoroughly surveyed for the presence of nesting birds by a qualified biologist (or a qualified arborist) within three days prior any tree removal. If any active nests are detected, the area will be flagged, and a minimum 250 foot (500 foot for raptors) non-disturbance buffer would be established (a modification of this buffer would be determined by the monitoring biologist and in consultation with US Fish and Wildlife Service and California Department of Fish and Wildlife), and would be avoided until the nesting cycle has been completed and the monitoring biologist determines that the nest has fledged. With this measure, the proposed Project will not have a significant effect due to unusual circumstances. No other known projects would involve cumulatively significant impacts, and no future projects would result from the proposed Project. As of July 16, 2024, the State Department of Toxic Substances Control (DTSC) (Envirostor at www.envirostor.dtsc.ca.gov) and the State Water Resources Control Board (SWRCB) (Geotracker at https://geotracker.waterboards.ca.gov/) have listed one section of the Project site as Case # 60000893. The site used to be a skeet shooting range which left lead pellets and other contaminants in the soil. The site was remediated between 2013 and 2018; an operation and maintenance plan was approved in 2020; and a Land Use Covenant (LUC) was executed in 2022. The LUC, acknowledged in the Agreement, provides guidelines for handling excavation and soil management when excavation occurs near the remediation area. No other contaminated site has been found near the Project area (within 1,000 feet). According to the Caltrans Scenic Highway Map there is no scenic highway located within the vicinity of the proposed Project or within its site. The proposed Project is located in proximity to Minnie Hill Palmer House, which is: (i) listed in the National Register of Historic Places (NHRP) with number 79000480; (ii) listed in the California Register of Historic Landmarks with number 21173; and (iii) classified as City of Los Angeles Historic Cultural Monument (HCM) N. 133. Minnie Hill Palmer House is the only remaining homestead cottage in the San Fernando Valley. The proposed Project will not affect this historic site and will not cause a substantial adverse change in the significance of any historical resource.

Based in this information, RAP staff recommends that the Board of Recreation and Park Commissioners determines that the proposed Project is categorically exempt from the provisions of the California Environmental Quality Act (CEQA) pursuant to Article 19, Section 15301 and 15303(d) of California CEQA Guidelines as well as Article III, Section 1, Class 1(14) and Class 3(5) of City CEQA Guidelines. Staff will file a Notice of Exemption with the Los Angeles County Clerk and the California Office of Planning and Research upon Board's approval.

FISCAL IMPACT

Approval of this Report will have no impact on RAPS's General Fund.

STRATEGIC PLAN INITIATIVES AND GOALS

Approval of this Board Report advances RAP's Strategic Plan by supporting:

Goal No. 2	Offer Affordable and Equitable Recreational Programming
Outcome No. 1	Improved health and social equity for young Angelenos
Result:	Granting the proposed pipeline easements will increase the water supply to Angelenos residing in the Chatsworth community.

This Report was prepared by Angela Wang, Management Assistant, Planning, Maintenance and Construction Branch.

LIST OF ATTACHMENTS/EXHIBITS

1. Proposed Right-of-Way Agreement
2. Proposed Easement Deed
3. Resolution
4. Twin Lakes Pump Station Final Plans
5. GSD Review and Independent Appraisal Report
6. Protected Tree Report
7. Rare Plant Survey

PARCEL NO.: 2723-009-903, 2723-010-904
PROJECT: Las Virgenes Municipal Water District-
Twin Lake Pump Station Pipeline
OWNER: The City of Los Angeles
TITLE REPORT-ESCROW NO.: 00090133-994-LTZ-DB

RIGHT OF WAY AGREEMENT
(WITH ESCROW INSTRUCTIONS)

THIS AGREEMENT is made and entered into by and between

THE CITY OF LOS ANGELES, a municipal corporation, hereinafter called "Grantor," and

LAS VIRGENES MUNICIPAL WATER DISTRICT, a municipal corporation of the State of California, hereinafter called "District."

An Easement Deed covering the property rights particularly described therein (the "Property"), has been executed concurrently with this Agreement and delivered to District representatives.

In consideration of which, and other considerations hereinafter set forth, it is mutually agreed as follows:

1. The parties have herein set forth the whole of their agreement. The performance of this Agreement constitutes the entire consideration for said Easement Deed and shall relieve the District of all further obligation or claims on this account, or on account of the location, grade or construction of the proposed public improvement (hereinafter referred to as the "Project").

2. The District shall:

A. PAYMENT - Pay to the order of the Grantor the sum of **SIX THOUSAND FIVE HUNDRED DOLLARS ($6,500)**, as consideration in full for the real property interests being conveyed in the referenced Easement Deed, for the loss, replacement and moving of any improvements, and for entering into this Agreement. Said sum shall be paid upon the close of escrow, which shall occur when title to said real property interests has vested in District free and clear of all liens, encumbrances, assessments, easements and leases, recorded or unrecorded, except for recorded public utility easements and public rights of way.

B. MISCELLANEOUS COSTS - Pay all escrow, title insurance, and recording fees incurred in this transaction.

C. CLEARANCE OF BONDS, ASSESSMENTS, OR DELINQUENT TAXES - Have the authority to deduct and pay from the amount shown in Clause 2.A. above any amount necessary to satisfy any bonds, demands, delinquent taxes due, together with penalties and interest thereon, and/or delinquent and unpaid non-delinquent assessments which have become a lien at the close of escrow.

D. PROPERTY RESTORATION – Shall, upon completion of construction, generally restore the surface of the easement areas described in the referenced Easement Deed to a comparable or better condition than that which existed prior to District's Project construction, to the extent reasonably practical, except in areas where surface appurtenances such as markers, manholes, and access vaults may be located.

E. INDEMNIFICATION - Indemnify and hold harmless Grantor from any and all claims, damages, costs, judgments, or liability caused by District or its officers, employees or agents specifically arising from District's Project construction and restoration work on Grantor's property or as a direct result of District's operation of District facilities on Grantor's property.

F. RECORDATION OF INSTRUMENT - Accept the Easement Deed herein referenced and cause the same to be recorded in the office of the Los Angeles County Recorder at such time as when clear title can be conveyed to the District.

3. The Grantor:

A. PAYMENT ON MORTGAGE OR DEED OF TRUST - Agrees that any or all monies payable under this Agreement up to and including the total amount of the unpaid principal and interest on the note(s) secured by mortgage(s) or deed(s) of trust, if any, and all other amounts due and payable in accordance with the terms and conditions of said mortgage(s) or deed(s) of trust, shall upon demand(s) be made payable to the mortgagee(s) or beneficiary(s) entitled thereunder. Grantor shall cooperate with the Escrow Officer in obtaining subordination agreements from any and all creditors holding liens against said Property.

B. LEASE INDEMNIFICATION - Warrants there are no oral or written leases of all or any portion of the easement areas described in the referenced Easement Deed, or if there are any such leases, Grantor agrees to hold the District harmless and reimburse District for any and all of its losses and expenses occasioned by reason of any lease of said Property held by tenant of Grantor.

C. PERMISSION TO ENTER - Hereby grants to the District, its agents and contractors, permission to enter upon the easement areas described in the referenced Easement Deed prior to the close of escrow for the purposes of preparation for and construction of the District's facilities, subject to all applicable terms and conditions contained in this Agreement and the associated Easement Deed. The rights granted herein include authorization to conduct pre-construction surveys and soil sampling and testing, as well as the right to commence Project construction. If at any time prior to the installation of District's waterline and related facilities within the easement areas described in the referenced Easement Deed, and prior to the close of escrow, District discovers any physical condition of the Property, including but not limited to evidence of contamination by hazardous materials, which District deems unacceptable, District may unilaterally terminate this Agreement and cancel the escrow, by giving written notice to Grantor and escrow holder, without any further obligations or liabilities related hereto other than to restore the property to a comparable condition as that which existed prior to District's entry.

D. GRANTOR'S KNOWLEDGE OF THE ENVIRONMENTAL CONDITIONS OF THE PROPERTY – Hereby represents and warrants that to the best of Grantor's knowledge and belief, throughout the period of ownership of the Property by Grantor, there has been no spill, discharge,

release, cleanup or contamination of or by any hazardous or toxic waste or substance used, generated, treated, stored, disposed of or handled by the Grantor, its employees, and/or agents on or around the Property. Further, Grantor agrees to disclose to District, prior to the close of escrow, all studies, reports, and investigations, known to Grantor, concerning any pollution, toxic building materials or toxic hazardous substances or wastes located at, on, or under the Property.

4. The Parties agree:

A. ESCROW - To open an escrow in accordance with this Agreement at an escrow company of District's choice. This Agreement constitutes the joint escrow instructions of District and Grantor, and Escrow Agent to whom these instructions are delivered is hereby empowered to act under this Agreement. The parties hereto agree to do all acts necessary to close this escrow in the shortest possible time.

As soon as possible after opening of escrow, District will deposit the executed Deed by Grantor, with Certificate of Acceptance attached, with Escrow Agent on Grantor's behalf. District agrees to deposit the purchase price upon demand of Escrow Agent. District and Grantor agree to deposit with Escrow Agent all additional instruments as may be necessary to complete this transaction. All funds received in this escrow shall be deposited with other escrow funds in a general escrow fund account(s) and may be transferred to any other such escrow trust account in any State or National Bank doing business in the State of California. All disbursements shall be made by check or wire from such account.

Any taxes which have been paid by Grantor, prior to opening of this escrow, shall not be pro-rated between District and Grantor, but Grantor shall have the sole right after close of escrow, to apply to the County Tax Collector of said County for any refund of such taxes which may be due Grantor for the period after the waterline easement conveyance is completed.

i) ESCROW AGENT DIRECTIVES - Escrow Agent is authorized to, and shall:

a) Pay and charge Grantor for any unpaid delinquent taxes and/or any penalties and interest thereon, and for any delinquent assessments or bonds against that portion of Grantor's Land subject to this transaction as required to convey clear title.

b) Pay and charge District for any escrow fees, charges and costs payable under paragraph 2.B. of this Agreement.

c) Disburse funds and deliver Deed when conditions of this escrow have been fulfilled by District and Grantor.

d) Following recording of Deed from Grantor, provide District with a CLTA Standard Coverage Policy of Title Insurance in the amount of $6,500 issued by Chicago Title Company, showing that title to the herein referenced easements is vested in District, subject only to the following exceptions, and the printed exceptions and stipulations in said policy:

1) Real Property Taxes for the fiscal year in which escrow closes;

2) Public utility easements and public rights of way;
3) Other items that may be approved by District in writing in advance of the close of escrow.

ii) CLOSE OF ESCROW - The term "close of escrow", if and where written in these instructions, shall mean the date necessary instruments of conveyance are recorded in the office of the County Recorder. Recordation of instruments delivered through this escrow is hereby authorized.

B. ARTICLE HEADINGS - Article headings in this Agreement are for convenience only and are not intended to be used in interpreting or construing the terms, covenants and conditions of this Agreement.

C. SUCCESSORS AND ASSIGNS - This Agreement shall apply to and bind the heirs, executors, administrators, assigns and successors of the parties hereto.

D. COUNTERPARTS - This Agreement may be executed in counterparts, each of which so executed shall irrespective of the date of its execution and delivery be deemed an original, and all such counterparts together shall constitute one and the same document.

E. ELECTRONIC AND FACSIMILE SIGNATURES – In the event that the parties hereto utilize electronic or facsimile documents which include signatures, such documents shall be accepted as if they bore original signatures provided that documents bearing ORIGINAL SIGNATURES are provided following transmittal of the electronic or facsimile signature. Documents for recordation by the County Recorder must contain original signatures.

F. COMPLETE UNDERSTANDING - This Agreement constitutes the entire understanding between the parties with respect to the subject matter hereof, superseding all negotiations, prior discussions, and preliminary agreements or understandings, written or oral. This Agreement may not be amended except in writing by the parties hereto or their successors or assigns.

G. BOARD APPROVAL - This Agreement is subject to and conditioned upon approval by the Board of the District. This Agreement is not binding upon the District until executed by the appropriate District official(s) acting in their authorized capacity.

No Obligation Other Than Those Set Forth Herein Will Be Recognized.

GRANTOR:
City of Los Angeles, a municipal corporation

By: _____ Date: _____
Name:
Title:

By: _____ Date: _____
Name:
Title:

MAILING ADDRESS OF GRANTOR:
City of Los Angeles
Department of General Services
City of Los Angeles
111 E. First Street, Room 201
Los Angeles CA 90012

DISTRICT:
LAS VIRGENES MUNICIPAL WATER DISTRICT

By: _____ Date: _____
David W. Pedersen, P.E.
General Manager

MAILING ADDRESS OF DISTRICT:
Las Virgenes Municipal Water District
4232 Las Virgenes Road
Calabasas, CA 91302

Recording requested by:
Hamner, Jewell & Associates
Government Real Estate Services

When recorded, mail to:
Las Virgenes Municipal Water District
4232 Las Virgenes Road
Calabasas, CA 91302

Exempt from the $75 Building and Jobs Act Fee per Gov't Code § 27388.1(2)(D) Public Agency
No fee pursuant to Government Code § 6103
No Documentary Transfer Tax per R&T Code § 11922
No Recording Fee per Government Code § 27383

EASEMENT DEED
(Waterline)

APN: 2723-009-903, 2723-010-904

For a valuable consideration, receipt of which is hereby acknowledged,

THE CITY OF LOS ANGELES, A MUNICIPAL CORPORATION (hereinafter referred to as "Grantor"),

hereby grants to the

LAS VIRGENES MUNICIPAL WATER DISTRICT, a municipal corporation of the State of California, (hereinafter referred to as "Grantee"),

A **Permanent Easement** in gross to survey, install, construct, reconstruct, enlarge, lay, alter, operate, patrol, remove, relocate, and to replace, and maintain a water conduit, consisting of one or more underground water pipelines and related facilities, together with the right to enter upon, remove improvements, trees, shrubs and other vegetation, and to pass and repass over and along said easement and right of way and to deposit tools, implements, and other materials thereon, by said Grantee, its officers, agents and employees, and by any contractor, their agents and employees, engaged by said unto Grantor the right to construct, operate and maintain improvements, trees, shrubs and other vegetation which do not interfere with the Grantee's use of the subject easement as determined by the Grantee in its sole discretion. Said related facilities may include but are not limited to markers, air valves, manholes, valves, meters, surge control devices, test stations, buried communication devices, buried electrical conduits and devices, pull boxes, and all related incidents, fixtures, and appurtenances. The markers, test stations, pull boxes, blow off valves, air release valves, manholes, other related facilities, and turnouts may be located above ground or partially above ground. This easement shall be in, over, on, through, within, under, and across the Easement Area of the Real Property as defined in this paragraph. The "Real Property" is in the City of Los Angeles, County of Los Angeles, State of California, and is described in Exhibit "A", attached hereto and incorporated by reference herein. The "Easement Area" which

comprises the Permanent Easement is described in Exhibits "A-1, A-5, A-19" and depicted in Exhibits "B-1, B-5, B-19", attached hereto and incorporated by reference herein.

The Permanent Easement described herein shall be SUBJECT TO THE FOLLOWING TERMS AND CONDITIONS:

1. The facilities and improvements installed in the Easement Area collectively are referred to herein as the "Waterline Facilities." Plans for the Waterline Facilities as they exist from time to time shall be maintained at the Grantee's principal offices.

2. Grantee shall have the right of ingress and egress for personnel, vehicles, and construction equipment to, from, and along the Easement Area at any time, without prior notice, including the right to use lanes, drives, rights-of-way, and roadways within the Real Property which now exist or which hereinafter may be constructed, as shall be convenient and necessary for the purpose of exercising the rights herein set forth; provided, however, that nothing herein shall prevent or limit Grantor's rights to close such roadways, lanes, or rights-of-way, and to provide Grantee with comparable alternative access to the Easement Area, as deemed reasonable by the Grantee.

3. Grantor shall not temporarily or permanently modify, or allow others to in any way modify, the ground surface elevation in the Easement Area from the elevation established upon completion of construction of the Waterline Facilities without the Grantee's written consent, which consent shall not be withheld unreasonably. Grantor shall not conduct, or permit others to conduct, grading operations, ripping, stockpiling, or use, or permit others to use, explosives within or proximate to the Easement Area to the extent that the Waterline Facilities may be damaged.

4. This easement is subject to all existing fencing, canals, irrigation ditches, laterals, pipelines, roads, electrical transmission facilities, and communication lines existing on the date this easement is granted, and all future uses which do not directly or indirectly interfere with or endanger Grantee's exercise of the rights described herein; provided, however, that Grantee shall have the right to clear and keep clear from the Easement Area all explosives, buildings, structures, walls, and other facilities of a permanent nature, and any earth cover or stockpile of material placed without the Grantee's written consent, or which interfere with Grantee's access to and operation and protection of the Waterline Facilities; and

A **Temporary Construction Easement** for the purposes of facilitating construction of Grantee Facilities, including the right to place equipment and vehicles, pile earth thereon, and utilize said Temporary Construction Easement for all other related activities and purposes in, on, over, under, through, and across that certain portion of the Real Property which is described in Exhibits "A-2, A-6, A-20" and depicted in Exhibits B-2, B-6, B-20", attached hereto and incorporated by reference herein ("Temporary Construction Easements"). Said Temporary Construction Easement shall commence 15 days after issuance by Grantee of a Notice of Commencement of Construction, which shall be issued to Grantor by U.S. Mail, and shall automatically terminate upon completion of construction of Grantee Facilities and restoration of the Temporary Construction Easement area, or one (1) year after the effective date of the Notice of Commencement of Construction, whichever occurs first; however, Grantee shall have the right to extend the Temporary Construction Easement term in additional three (3) month increments if

Grantee determines that additional time beyond the one year period is necessary for construction completion. In such case, Grantee shall have the unilateral right to extend the Temporary Construction Easement period through construction completion and agrees to compensate Grantor **One Hundred Thirty-Nine Dollars ($139)** for each three-month extension term exercised. Payment for any such extension(s) shall be paid by Grantee to Grantor concurrent with Grantees' written notice to Grantor of Grantees' intent to exercise such extension provisions. In any event, this Temporary Construction Easement shall terminate on or before December 31, 2028.

Executed this _____ day of _____, 20_____

GRANTOR:
City of Los Angeles, a municipal corporation

By: _____
Name
Title:

By: _____
Name
Title:

ACKNOWLEDGMENT

A notary public or other officer completing this certificate verifies only the identity of the individual who signed the document to which this certificate is attached, and not the truthfulness, accuracy, or validity of that document.

State of California
County of _____

On _____ before me, _____, Notary Public, personally appeared _____, who proved to me on the basis of satisfactory evidence to be the person(s) whose name(s) is/are subscribed to the within instrument and acknowledged to me that he/she/they executed the same in his/her/their authorized capacity(ies), and that by his/her/their signatures(s) on the instrument the person(s), or the entity upon behalf of which the person(s) acted, executed the instrument.

I certify under PENALTY OF PERJURY under the laws of the State of California that the foregoing paragraph is true and correct.

WITNESS my hand and official seal.

Signature _____ (Seal)

ACKNOWLEDGMENT

A notary public or other officer completing this certificate verifies only the identity of the individual who signed the document to which this certificate is attached, and not the truthfulness, accuracy, or validity of that document.

State of California
County of _____

On _____ before me, _____, Notary Public, personally appeared _____, who proved to me on the basis of satisfactory evidence to be the person(s) whose name(s) is/are subscribed to the within instrument and acknowledged to me that he/she/they executed the same in his/her/their authorized capacity(ies), and that by his/her/their signatures(s) on the instrument the person(s), or the entity upon behalf of which the person(s) acted, executed the instrument.

I certify under PENALTY OF PERJURY under the laws of the State of California that the foregoing paragraph is true and correct.

WITNESS my hand and official seal.

Signature _____ (Seal)

CERTIFICATE OF ACCEPTANCE

This is to certify that the interest in real property conveyed by the deed dated _____ from the City of Los Angeles, a municipal corporation, to Las Virgenes Municipal Water District, a governmental agency, is hereby accepted by the undersigned officer on behalf of the Board of Directors pursuant to authority conferred by resolution of the Board of Directors adopted on August 27, 1996 and the grantee consents to the recordation thereof by its duly authorized officer.

Dated: _____ By: _____

David W. Pedersen, P.E.
General Manager
Las Virgenes Municipal Water District

EXHIBIT "A"

LEGAL DESCRIPTION

THE LAND REFERRED TO HEREIN BELOW IS SITUATED IN THE CITY OF LOS ANGELES, IN THE COUNTY OF LOS ANGELES, STATE OF CALIFORNIA, AND IS DESCRIBED AS FOLLOWS:

THE NORTH 15 ACRES OF THE NORTHWEST QUARTER OF THE NORTHEAST QUARTER OF SECTION 13, TOWNSHIP 2 NORTH, RANGE 17 WEST, SAN BERNARDINO MERIDIAN, IN THE CITY OF LOS ANGELES, COUNTY OF LOS ANGELES, STATE OF CALIFORNIA, ACCORDING TO THE OFFICIAL PLAT OF SAID LAND FILED IN THE DISTRICT LAND OFFICE OCTOBER 5, 1896.

EXCEPTING THEREFROM ANY PORTION INCLUDED WITHIN THE LINES OF COUNTY ROADS EXISTING ON OR BEFORE MAY 17, 1949.

ALSO EXCEPT THEREFROM THAT PORTION OF SAID LAND AS DESCRIBED IN THE JUDGMENT AND FINAL ORDER OF CONDEMNATION NO. 930 645, IN FAVOR OF THE LOS ANGELES COUNTY FLOOD CONTROL DISTRICT, RECORDED OCTOBER 5, 1972 AS INSTRUMENT NO. 2981, OF OFFICIAL RECORDS.

APN: **2723-009-903**

EXHIBIT "A"

LEGAL DESCRIPTION

THE LAND REFERRED TO HEREIN BELOW IS SITUATED IN THE CITY OF LOS ANGELES, IN THE COUNTY OF LOS ANGELES, STATE OF CALIFORNIA, AND IS DESCRIBED AS FOLLOWS:

THE NORTHWEST QUARTER OF SECTION 13, TOWNSHIP 2 NORTH, RANGE 17 WEST, SAN BERNARDINO BASE AND MERIDIAN, IN THE CITY OF LOS ANGELES, COUNTY OF LOS ANGELES, STATE OF CALIFORNIA.

EXCEPTING THEREFROM THAT PORTION OF SAID NORTHWEST QUARTER OF SAID SECTION 13 LYING NORTHERLY OF THE SOUTHERLY RIGHT OF WAY LINE OF THE LAND CONVEYED TO THE SOUTHERN PACIFIC RAILROAD COMPANY AS DESCRIBED IN DEEDS RECORDED IN BOOK 1364, PAGE 247, IN BOOK 1368, PAGE 235, IN BOOK 1371, PAGE 94, IN BOOK 1373, PAGE 106 AND IN BOOK 6519, PAGE 165 ALL OF DEEDS, IN THE OFFICE OF THE COUNTY RECORDER OF LOS ANGELES COUNTY.

ALSO EXCEPTING THEREFROM THAT PORTION OF SAID NORTHWEST QUARTER OF SAID SECTION 13, INCLUDED WITHIN A PARCEL OF LAND CONVEYED TO THE SOUTHERN PACIFIC RAILROAD COMPANY AS DESCRIBED IN DEED RECORDED IN BOOK 1464, PAGE 319 OF DEEDS, IN THE OFFICE OF THE COUNTY RECORDER.

ALSO, EXCEPTING THEREFROM THAT PORTION OF SAID NORTHWEST QUARTER OF SAID SECTION 13, INCLUDED WITHIN A PARCEL OF LAND BOUNDED AND DESCRIBED AS FOLLOWS:

COMMENCING AT THE NORTHWEST CORNER OF SAID SECTION 13; THENCE SOUTHERLY ALONG THE WESTERLY LINE OF SAID SECTION, SOUTH 0°13'01"WEST 639.06 FEET TO A POINT, SAID POINT TO BE THE TRUE POINT OF BEGINNING; FOR PURPOSES OF THIS DESCRIPTION; THENCE SOUTH 79°46'00" EAST, 69.22 FEET; THENCE NORTH 83°56'14"EAST, 37.87 FEET; THENCE SOUTH 24°53'56" EAST, 20.00 FEET; THENCE SOUTH 65°06'04" WEST, 53.53 FEET; THENCE SOUTH 10°14'00" WEST, 110.59 FEET; THENCE NORTH 79°46'00" WEST TO THE WESTERLY LINE OF SAID SECTION; THENCE NORTHERLY ALONG SAID WESTERLY LINE TO THE TRUE POINT OF BEGINNING.

ALSO, EXCEPTING THEREFROM THAT PORTION OF SAID NORTHWEST QUARTER OF SAID SECTION 13 LYING SOUTHERLY AND SOUTHWESTERLY OF A LINE DESCRIBED AS FOLLOWS:

BEGINNING AT THE INTERSECTION OF THE EASTERLY LINE OF SAID NORTHWEST QUARTER OF SAID SECTION WITH THE WESTERLY PROLONGATION OF THE CENTER LINE OF DEVONSHIRE STREET, 100 FEET WIDE AS SAID CENTER LINE IS SHOWN IN THE CITY ENGINEER'S F.B. 12919, PAGE 8; THENCE WEST ALONG SAID WESTERLY PROLONGATION, 180 FEET; THENCE NORTH 28°13'00" WEST, 1040 FEET; THENCE WEST, 320 FEET; THENCE SOUTH 50°49'00" WEST, 540 FEET; THENCE NORTH 39°11'00" WEST TO THE WESTERLY LINE OF SAID SECTION 13.

ALSO, EXCEPTING THEREFROM THAT PORTION OF SAID NORTHWEST QUARTER OF SAID SECTION 13, INCLUDED WITHIN A PARCEL OF LAND BOUNDED AND DESCRIBED AS FOLLOWS:

BEGINNING AT A POINT IN THE EASTERLY LINE OF SAID NORTHWEST QUARTER OF SAID SECTION, SAID POINT BEING DISTANT NORTH 0°10'20" EAST 1117.21 FEET MEASURED ALONG THE EASTERLY LINE OF SAID NORTHWEST QUARTER FROM THE INTERSECTION OF SAID EASTERLY LINE WITH THE WESTERLY PROLONGATION OF SAID CENTER LINE OF DEVONSHIRE STREET; THENCE NORTH 86°20'36" WEST 251.96 FEET; THENCE SOUTH 13°19'24" WEST, 218.39 FEET; THENCE SOUTH 76°35'52" EAST TO THE EASTERLY LINE OF SAID NORTHWEST QUARTER; THENCE ALONG SAID EASTERLY LINE, NORTH 0°10'20" EAST TO THE POINT OF BEGINNING.

ALSO, EXCEPTING THEREFROM THAT PORTION OF SAID NORTHWEST QUARTER OF SAID SECTION 13 LYING NORTHERLY AND EASTERLY OF A LINE DESCRIBED AS FOLLOWS:

EXHIBIT A
(Continued)

BEGINNING AT A POINT IN THE EASTERLY LINE OF SAID NORTHWEST QUARTER DISTANT NORTH 0°10'20" EAST, 1117.21 FEET MEASURED ALONG THE EASTERLY LINE OF SAID NORTHWEST QUARTER FROM THE INTERSECTION OF SAID EASTERLY LINE WITH THE WESTERLY PROLONGATION OF SAID CENTER LINE OF DEVONSHIRE STREET; THENCE NORTH 86°20'38" WEST, 103.87 FEET; THENCE NORTH 71°24'40" WEST, 572.63 FEET; THENCE NORTH 0°01'40" WEST TO THE NORTHERLY LINE OF SAID NORTHWEST QUARTER.

ALSO EXCEPTING THEREFROM ANY PORTION OF SAID NORTHWEST QUARTER OF SAID SECTION 13, WHICH MAY BE INCLUDED WITHIN A STRIP OF LAND, 50 FEET WIDE RUNNING NORTHERLY AND SOUTHERLY THROUGH SAID NORTHWEST QUARTER UPON WHICH WAS LOCATED APRIL 22, 1912, A SPUR RAILROAD TRACK OF THE SOUTHERN PACIFIC RAILROAD COMPANY AS MENTIONED IN DEED FROM IDA S. GRAY RECORDED IN BOOK 4886, PAGE 307 OF DEEDS, IN THE OFFICE OF SAID COUNTY RECORDER.

ALSO EXCEPTING THEREFROM THAT PORTION OF THE NORTHWEST QUARTER OF SECTION 13, TOWNSHIP 2 NORTH, RANGE 17 WEST, SAN BERNARDINO BASE AND MERIDIAN, IN THE COUNTY OF LOS ANGELES, STATE OF CALIFORNIA, DESCRIBED AS FOLLOWS:

BEGINNING AT THE NORTH QUARTER CORNER OF SAID SECTION 13; THENCE SOUTH 00°10'20" WEST 32.85 FEET ALONG THE NORTH-SOUTH QUARTER SECTION LINE OF SAID SECTION 13, TO A LOS ANGELES COUNTY SURVEYOR'S MONUMENT SET AS, AND MARKED, WITNESS CORNER, PER LOS ANGELES COUNTY SURVEYOR'S MAP NO. B-1015-1; THENCE SOUTH 89° 35'03" WEST 13.20 FEET; THENCE NORTH 88°52'05" WEST 900.32 FEET; THENCE SOUTH 73°00'55" WEST 163.63 FEET; THENCE SOUTH 10°38'25" WEST 181.35 FEET; THENCE SOUTH 53°06'25" WEST 311.88 FEET; THENCE NORTH 09°05'10" EAST, 5.67 FEET TO THE TRUE POINT OF BEGINNING; THENCE
1. NORTH 80°54'40" WEST 60.00 FEET; THENCE

2. NORTH 09°05'10' EAST, 95.30 FEET TO A POINT OF THE SOUTHERLY LINE OF THE SOUTHERN PACIFIC RAILROAD RIGHT OF WAY; THENCE,

3. NORTH 73°00'55" EAST 58.46 FEET ALONG THE SOUTHERLY LINE OF SAID SOUTHERN PACIFIC RAILROAD RIGHT OF WAY; THENCE,

4. SOUTH 80°54'40" EAST 24.10 FEET; THENCE

5. SOUTH 35°54'40" EAST 26.00 FEET; THENCE

6. SOUTH 05°18'20" WEST 96.46 FEET; THENCE

7. SOUTH 54°05'20" WEST 9.00 FEET; THENCE

8. NORTH 80°54'40" WEST 35.00 FEET TO THE TRUE POINT OF BEGINNING.

ALSO EXCEPT ONE HALF OF ALL OF THE OIL, GAS AND OTHER MINERALS, IN AND UNDER SAID LAND, WITH THE RIGHT OF INGRESS AND EGRESS TO AND FROM SAID LAND, FOR THE PURPOSE OF DRILLING, EXPLORING AND MINING FOR SUCH MINERALS, AND REMOVING THE SAME, AS RESERVED BY MINNIE A. PALMER AND LAURA A. HILL, IN DEED RECORDED JANUARY 16, 1956 IN BOOK 50049, PAGE 394 OF OFFICIAL RECORDS.

APN: **2723-010-904**

EXHIBIT "A-1"

LEGAL DESCRIPTION

FOR PERMANENT EASEMENT

(PORTION OF APN 2723-009-903)

Being a strip of land, 20.00 feet wide, in the City of Los Angeles, County of Los Angeles, State of California, over a portion of the Northeast Quarter of Section 13, Township 2 North, Range 17 West, San Bernardino Meridian, the centerline of said strip of land described as follows:

Beginning at a point in the southerly line of the lands described in Resolution No. 2529, recorded July 3, 1958, as Instrument No. 1112 of Official Records of Los Angeles County, said point bears North 89°44'19" West 21.36 feet from the southeasterly corner of said lands; thence,

1st: North 0°01'18" East 79.41 feet; thence,

2nd: West 19.65 feet to the intersection with the easterly line of Parcel No. 135A, as described in the Judgment and Final Order of Condemnation recorded October 5, 1972, as Instrument No 2981 of Official Records of Los Angeles County.

The sidelines of said strip of land to be lengthened or shortened to terminate southerly in said southerly line of Resolution No. 2529, and westerly in said easterly line of Parcel No. 135A.

Containing 1,981 square feet, more or less.

Larry Frager 6/1/22

Larry J. Frager, P.L.S. 7998 Date

PROFESSIONAL LAND SURVEYOR
LARRY J FRAGER
No. 7998
STATE OF CALIFORNIA

REF: 17071LD1B.DWG
DATE: 4/19/2022

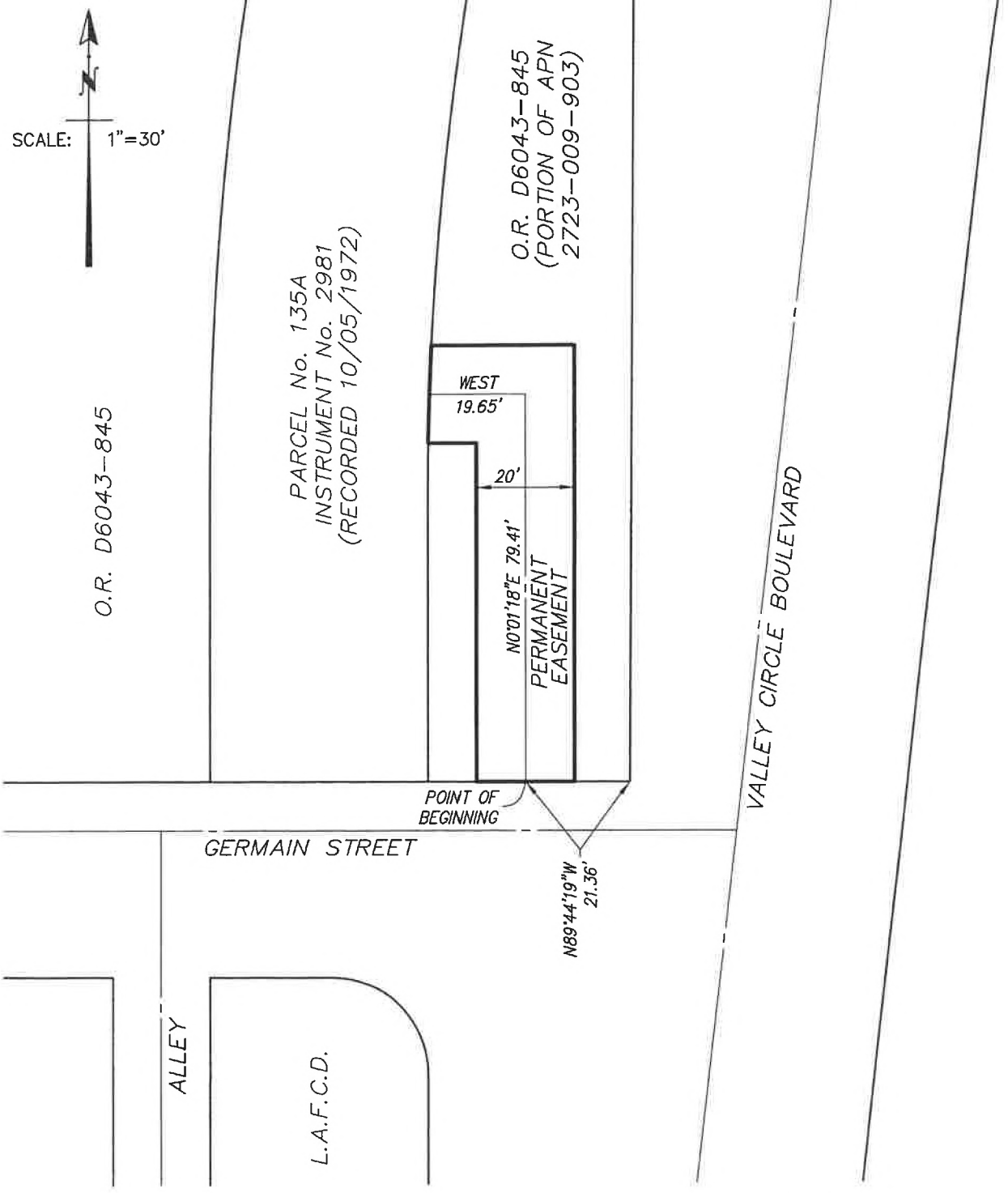

EXHIBIT "B-1"

SKETCH TO ACCOMPANY LEGAL DESCRIPTION FOR PERMANENT EASEMENT

PREPARED BY:
BENNER AND CARPENTER, INC.
506 EAST MAIN STREET
SANTA PAULA, CA 93060
(805) 525-3396

EXHIBIT "A-5"

LEGAL DESCRIPTION

FOR PEMANENT EASEMENT

(PORTION OF APN 2723-009-903)

Being a strip of land, 20.00 feet wide, in the City of Los Angeles, County of Los Angeles, State of California, over a portion of the Northeast Quarter of Section 13, Township 2 North, Range 17 West, San Bernardino Meridian, the centerline of said strip of land described as follows:

Beginning at a point in the southerly line of the lands described in Resolution No. 2529, recorded July 3, 1958, as Instrument No. 1112 of Official Records of Los Angeles County, said point bears North 89°44'19" West 21.36 feet from the southeasterly corner of said lands; thence,

1st: North 0°01'18" East 79.41 feet; thence.

2nd: West 365.82 feet; thence,

3rd: South 45°00'17" West 130.70 feet; thence,

4th: West 434.53 feet; thence,

5th: North 45°03'51" West 68.34 feet; thence,

6th: North 89°44'00" West 153.48 feet; thence,

7th: South 66°29'51" West 44.71 feet; thence,

8th: North 89°45'41" West 147.02 feet; thence,

9th: South 61°04'48" West 20.42 feet to the intersection with the East line of the Northwest Quarter of said Section 13.

EXCEPTING THEREFROM any portion of said strip of land which does not lie within that portion of said Resolution No. 2529 which lies westerly of Parcel No. 135A, as described in the Judgment and Final Order of Condemnation recorded October 5, 1972, as Instrument No. 2981 of Official Records of Los Angeles County.

Containing 16,342 square feet, more or less.

Larry Frager 6/1/22

Larry J. Frager, P.L.S. 7998 Date

PROFESSIONAL LAND SURVEYOR
LARRY J FRAGER
No. 7998
STATE OF CALIFORNIA

REF: 17071LD5B.DWG
DATE: 4/19/2022

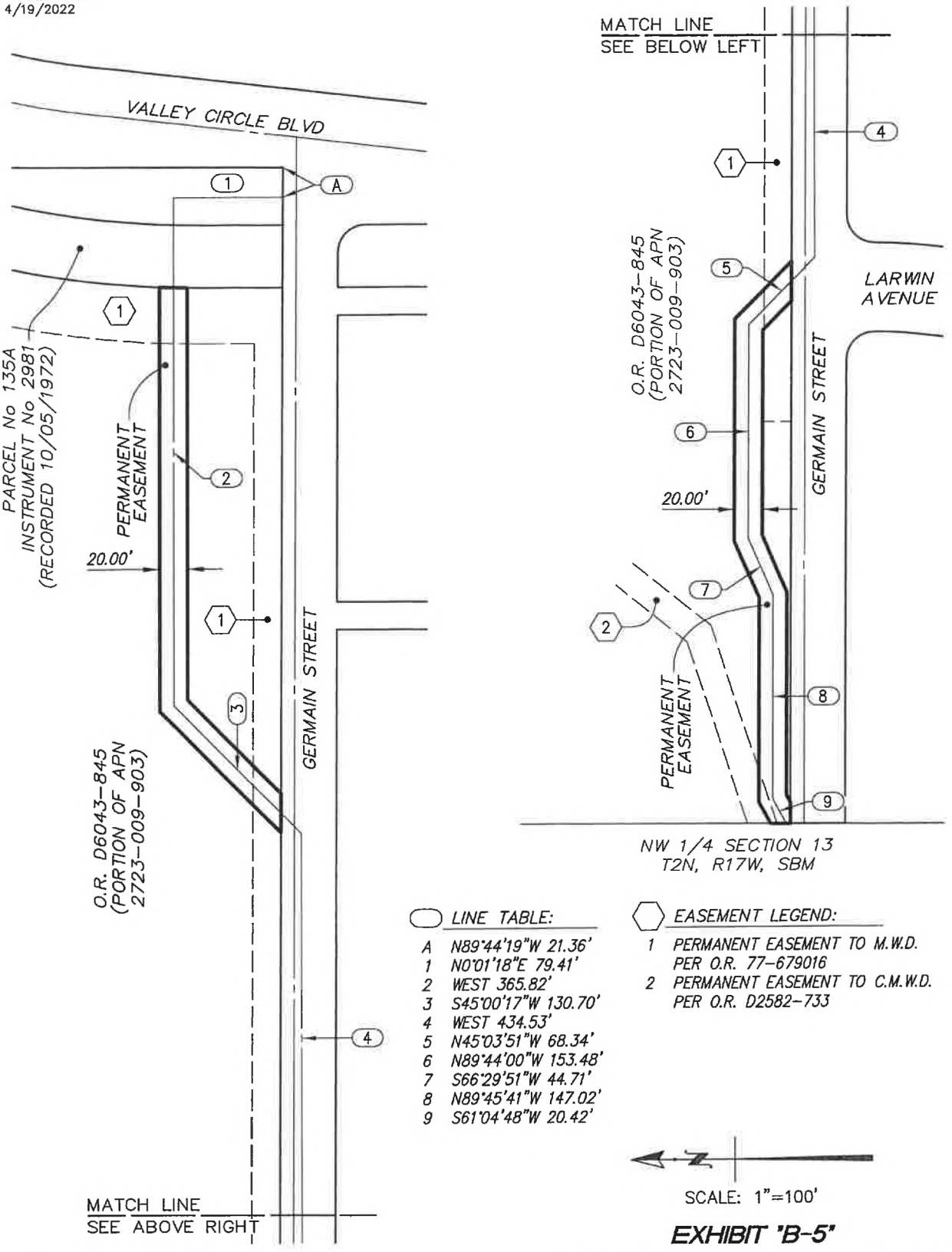

LINE TABLE:

A	N89°44'19"W 21.36'
1	N0°01'18"E 79.41'
2	WEST 365.82'
3	S45°00'17"W 130.70'
4	WEST 434.53'
5	N45°03'51"W 68.34'
6	N89°44'00"W 153.48'
7	S66°29'51"W 44.71'
8	N89°45'41"W 147.02'
9	S61°04'48"W 20.42'

EASEMENT LEGEND:

1 PERMANENT EASEMENT TO M.W.D. PER O.R. 77-679016
2 PERMANENT EASEMENT TO C.M.W.D. PER O.R. D2582-733

SCALE: 1"=100'

EXHIBIT "B-5"

SKETCH TO ACCOMPANY LEGAL DESCRIPTION FOR PERMANENT EASEMENT

PREPARED BY:
BENNER AND CARPENTER, INC.
506 EAST MAIN STREET
SANTA PAULA, CA 93060
(805) 525-3396

EXHIBIT "A-19"

LEGAL DESCRIPTION

FOR PERMANENT EASEMENT

(PORTION OF APN 2723-010-904)

Being a strip of land, 30.00 feet wide, in the City of Los Angeles, County of Los Angeles, State of California, over a portion of the Northwest Quarter of Section 13, Township 2 North, Range 17 West, San Bernardino Meridian, the centerline of said strip of land described as follows:

Beginning at a point in the southerly line of the lands described in Resolution No. 2529, recorded July 3, 1958, as Instrument No. 1112 of Official Records of Los Angeles County, said point bears North 89°44'19" West 21.36 feet from the southeasterly corner of said lands; thence North 0°01'18" East 79.41 feet; thence West 365.82 feet; thence South 45°00'17" West 130.70 feet; thence West 434.53 feet; thence North 45°03'51" West 68.34 feet; thence North 89°44'00" West 153.48 feet; thence South 66°29'51" West 44.71 feet; thence North 89°45'41" West 147.02 feet; thence South 61°04'48" West 94.58 feet; thence South 89°23'52" West 43.57 feet; thence South 45°09'38" West 225.76 feet; thence South 53°52'19" West 69.40 feet, along a line hereinafter referred to as "Line A", to the intersection with the westerly line of the lands described in the Grant Deed recorded January 24, 1991, as Instrument No. 91-103605 of Official Records of Los Angeles County; thence along said westerly line South 0°18'32" West 6.22 feet to the intersection with a line, parallel with and 5.00 feet southeasterly of, measured at right angles, "Line A" hereinabove described, said point being the True Point of Beginning of this description; thence along said parallel line,

1st: South 53°52'19" West 142.05 feet; thence,

2nd: North 88°55'57" West 435.95 feet; thence,

3rd: North 70°38'05" West 56.94 feet; thence,

4th: South 87°50'39" West 47.00 feet; thence,

5th: North 65°57'11" West 159.30 feet; thence,

6th: North 75°16'19" West 283.27 feet; thence,

7th: North 9°00'00" East 240.35 feet to the intersection with southerly line of the lands described in the Grant Deed recorded May 26, 1966, as Instrument No. 3387 in Book D3317, Page 835 of Official Records of Los Angeles County.

The sidelines of said strip of land to be lengthened or shortened to terminate northerly in the southerly line of said Instrument No. 3387.

EXCEPTING THEREFROM any portion of said strip of land which does not lie within the lands described in the Grant Deed recorded June 27, 1966, as Instrument No. 2656 of Official Records of Los Angeles County.

Containing 30,368 square feet, more or less.

Larry Frager 6/1/22

Larry J. Frager, P.L.S. 7998 Date



REF: 17071LD19B.DWG
DATE: 5/9/2022

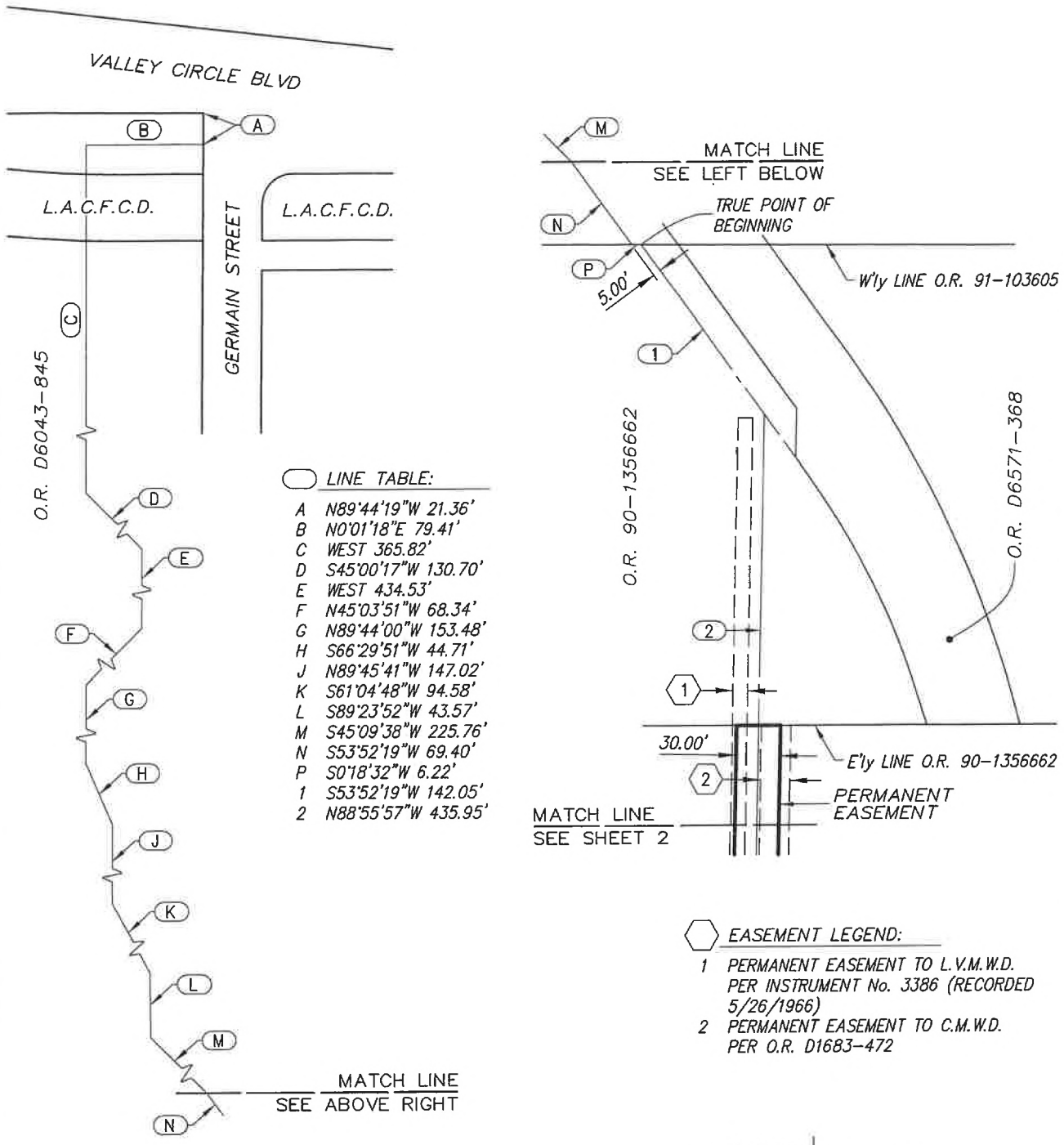

LINE TABLE:

A	N89°44'19"W 21.36'
B	N0°01'18"E 79.41'
C	WEST 365.82'
D	S45°00'17"W 130.70'
E	WEST 434.53'
F	N45°03'51"W 68.34'
G	N89°44'00"W 153.48'
H	S66°29'51"W 44.71'
J	N89°45'41"W 147.02'
K	S61°04'48"W 94.58'
L	S89°23'52"W 43.57'
M	S45°09'38"W 225.76'
N	S53°52'19"W 69.40'
P	S0°18'32"W 6.22'
1	S53°52'19"W 142.05'
2	N88°55'57"W 435.95'

EASEMENT LEGEND:

1 PERMANENT EASEMENT TO L.V.M.W.D. PER INSTRUMENT No. 3386 (RECORDED 5/26/1966)

2 PERMANENT EASEMENT TO C.M.W.D. PER O.R. D1683-472

SCALE: 1"=100'

EXHIBIT "B-19"

SKETCH TO ACCOMPANY LEGAL DESCRIPTION FOR PERMANENT EASEMENT

SKETCH SHEET 1 OF 2

PREPARED BY:
BENNER AND CARPENTER, INC.
506 EAST MAIN STREET
SANTA PAULA, CA 93060
(805) 525-3396

REF: 17071LD19B.DWG
DATE: 4/20/2022

LINE TABLE:

2	N88°55'57"W 435.95'
3	N70°38'05"W 56.94'
4	S87°50'39"W 47.00'
5	N65°57'11"W 159.30'
6	N75°16'19"W 283.27'
7	N9°00'00"E 240.35'

EASEMENT LEGEND:

1 PERMANENT EASEMENT TO L.V.M.W.D. PER INSTRUMENT No. 3386 (RECORDED 5/26/1966)

2 PERMANENT EASEMENT TO C.M.W.D. PER O.R. D1683-472

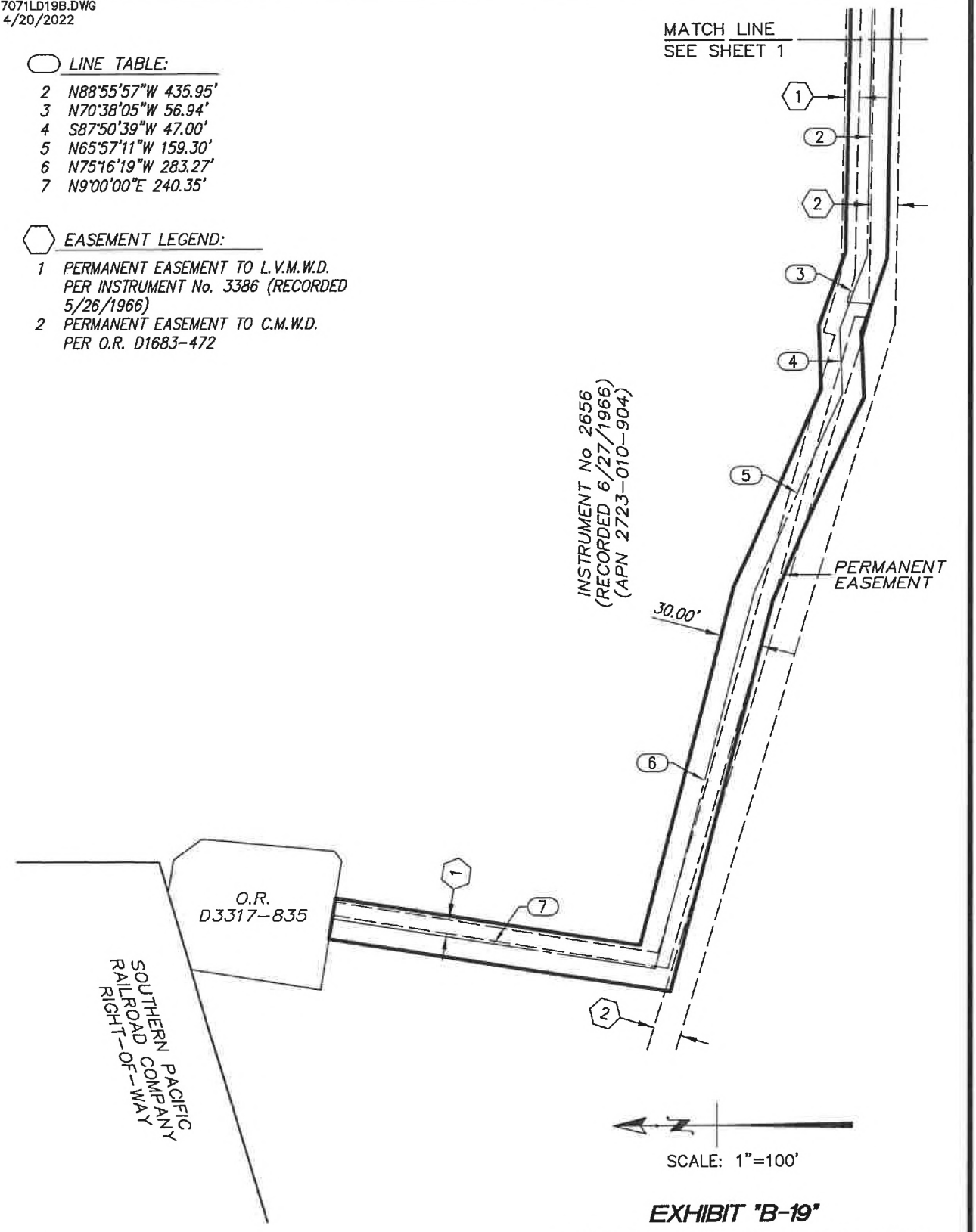

EXHIBIT "B-19"

SKETCH TO ACCOMPANY LEGAL DESCRIPTION FOR PERMANENT EASEMENT

SKETCH SHEET 2 OF 2

PREPARED BY:
BENNER AND CARPENTER, INC.
506 EAST MAIN STREET
SANTA PAULA, CA 93060
(805) 525-3396

EXHIBIT "A-2"

LEGAL DESCRIPTION

FOR TEMPORARY EASEMENT

(PORTION OF APN 2723-009-903)

That portion of the Northeast Quarter of Section 13, Township 2 North, Range 17 West, San Bernardino Meridian, in the City of Los Angeles, County of Los Angeles, State of California, described as follows:

Beginning at the southeasterly corner of the lands described in Resolution No. 2529, recorded July 3, 1958, as Instrument No. 1112 of Official Records of Los Angeles County; thence along the southerly line of said lands,

1st: North 89°44'19" West 41.34 feet to the intersection with the easterly line of Parcel No. 135A, as described in the Judgment and Final Order of Condemnation recorded October 5, 1972, as Instrument No 2981 of Official Records of Los Angeles County; thence along said easterly line by the following two courses:

2nd: North 0°01'31" East 58.78 feet to the beginning of a tangent curve, concave easterly and having a radius of 645.00 feet; thence,

3rd: Northerly along said curve an arc distance of 50.59 feet through a central angle of 4°29'39"; thence non-tangent to said curve,

4th: East 39.90 feet to the intersection with the easterly line of said Resolution No. 2529; thence along said easterly line,

5th: South 0°18'37" West 109.51 feet to the point of beginning of this description.

EXCEPTING THEREFROM a strip of land, 20.00 feet wide, the centerline of which described as follows: Beginning at a point in the southerly line of said Resolution No. 2529 which bears North 89°44'19" West 21.36 feet from the southeasterly corner of said land; thence,

1st: North 0°01'18" East 79.41 feet; thence,

2nd: West 19.65 feet to the intersection with the easterly line of said Parcel No. 135A.

The sidelines of said strip of land to be lengthened or shortened to terminate southerly in said southerly

line of Resolution No. 2529, and westerly in said easterly line of Parcel No. 135A.

Containing 2,539 square feet, more or less.

Larry J. Frager, P.L.S. 7998 — Date 6/1/22

PROFESSIONAL LAND SURVEYOR
LARRY J FRAGER
No. 7998
STATE OF CALIFORNIA

REF: 17071LD2B.DWG
DATE: 4/19/2022

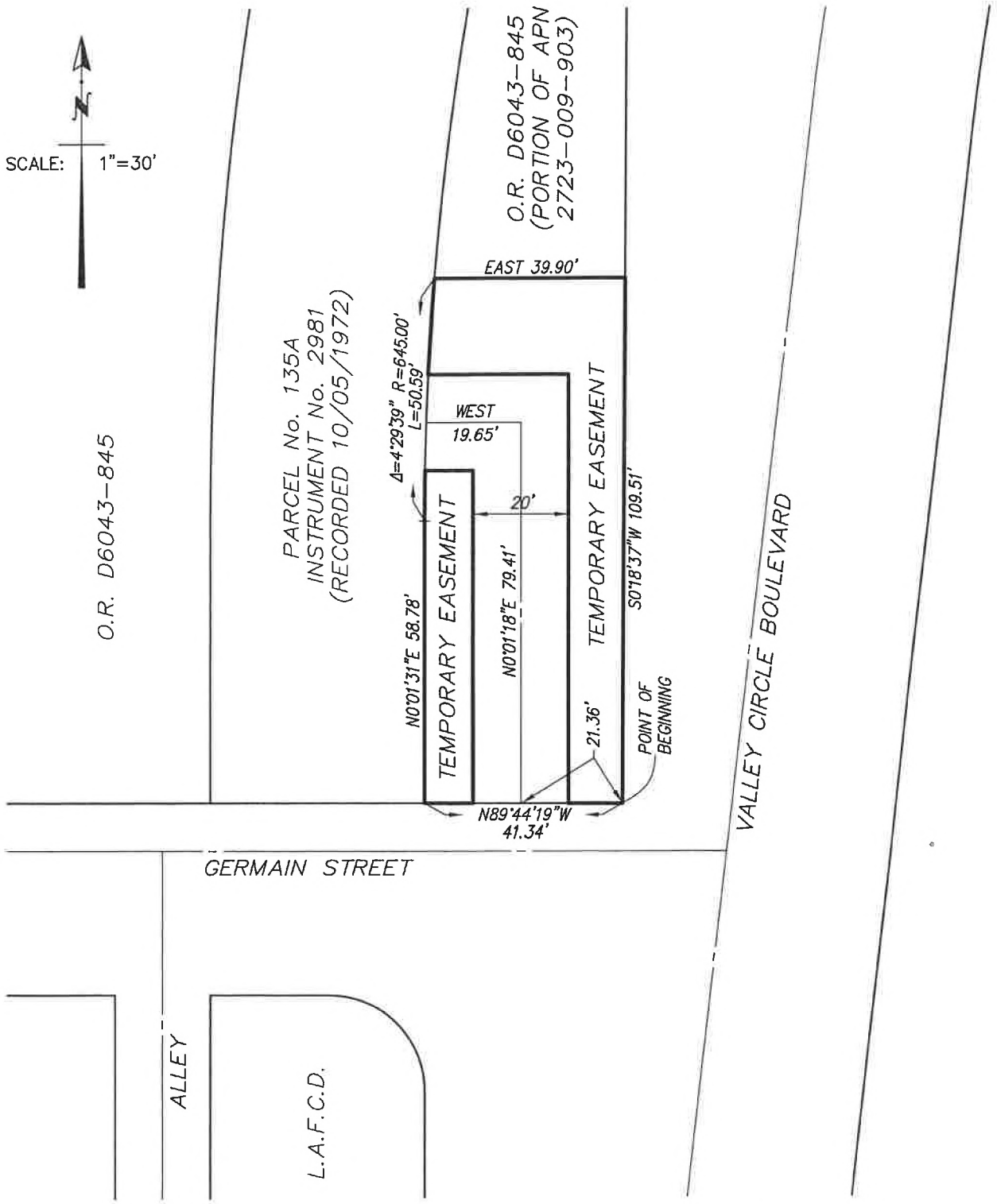

EXHIBIT "B-2"

SKETCH TO ACCOMPANY
LEGAL DESCRIPTION
FOR TEMPORARY EASEMENT

PREPARED BY:
BENNER AND CARPENTER, INC.
506 EAST MAIN STREET
SANTA PAULA, CA 93060
(805) 525--3396

EXHIBIT "A-6"

LEGAL DESCRIPTION

FOR TEMPORARY EASEMENT

(PORTION OF APN 2723-009-903)

Being a strip of land, 10.00 feet wide, in the City of Los Angeles, County of Los Angeles, State of California, over a portion of the Northeast Quarter of Section 13, Township 2 North, Range 17 West, San Bernardino Meridian, said strip of land being adjacent and northerly, northwesterly and northeasterly of a strip of land, 20.00 feet wide, the centerline of said 20.00 foot wide strip of land described as follows:

Beginning at a point in the southerly line of the lands described in Resolution No. 2529, recorded July 3, 1958, as Instrument No. 1112 of Official Records of Los Angeles County, said point bears North 89°44'19" West 21.36 feet from the southeasterly corner of said lands; thence,

1st: North 0°01'18" East 79.41 feet; thence.

2nd: West 365.82 feet; thence,

3rd: South 45°00'17" West 130.70 feet; thence,

4th: West 434.53 feet; thence,

5th: North 45°03'51" West 68.34 feet; thence,

6th: North 89°44'00" West 153.48 feet; thence,

7th: South 66°29'51" West 44.71 feet; thence,

8th: North 89°45'41" West 147.02 feet; thence,

9th: South 61°04'48" West 20.42 feet to the intersection with the East line of the Northwest Quarter of said Section 13.

EXCEPTING THEREFROM any portion of said 10.00 foot wide strip of land which does not lie within that portion of said Resolution No. 2529 which lies westerly of Parcel No. 135A, as described in the Judgment and Final Order of Condemnation recorded October 5, 1972, as Instrument No. 2981 of Official Records of Los Angeles County.

Containing 10,373 square feet, more or less.

Larry Frager 6/1/22

Larry J. Frager, P.L.S. 7998 Date

PROFESSIONAL LAND SURVEYOR
LARRY J FRAGER
No. 7998
STATE OF CALIFORNIA

REF: 17071LD6B.DWG
DATE: 4/19/2022

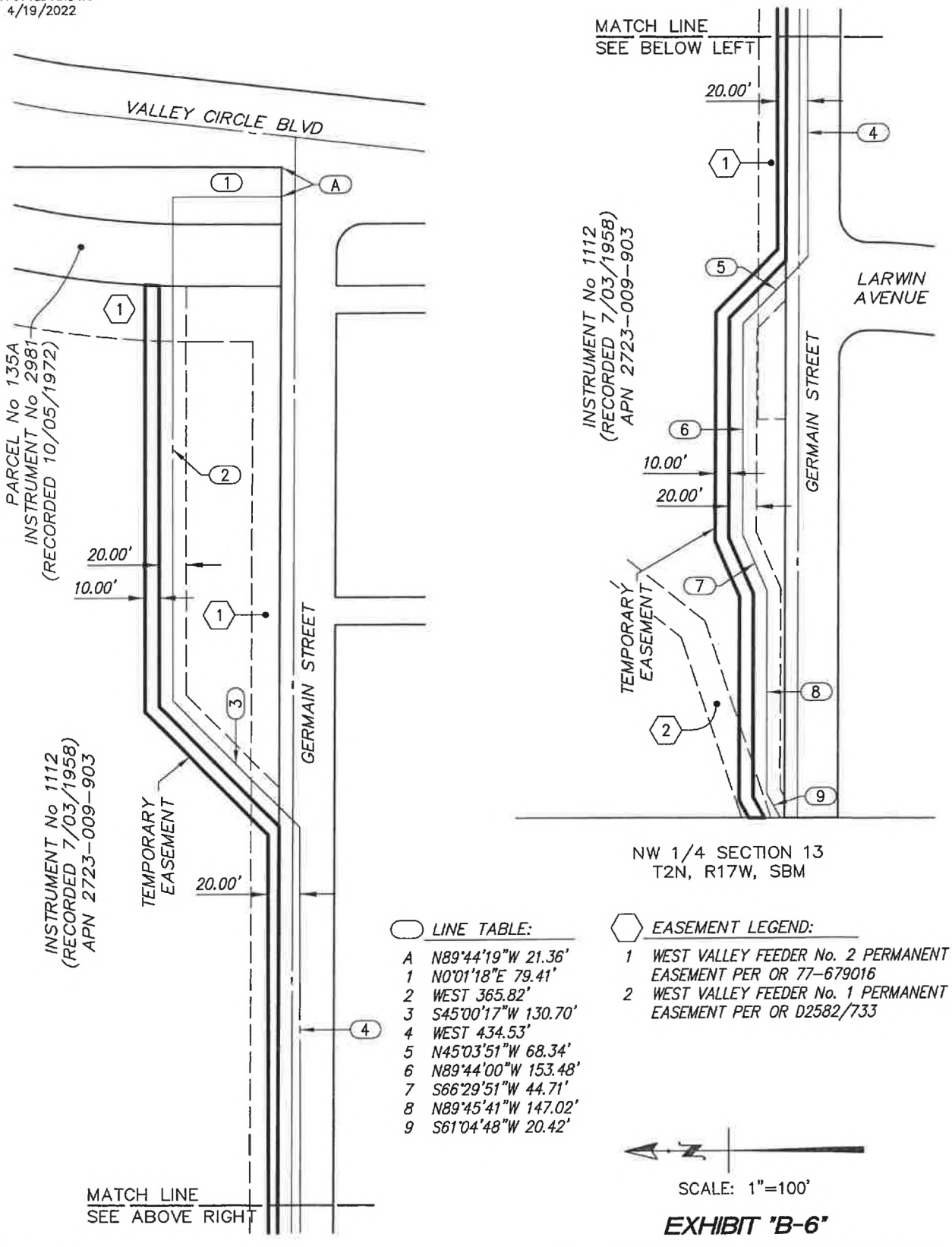

NW 1/4 SECTION 13
T2N, R17W, SBM

LINE TABLE:

A	N89°44'19"W 21.36'
1	N0°01'18"E 79.41'
2	WEST 365.82'
3	S45°00'17"W 130.70'
4	WEST 434.53'
5	N45°03'51"W 68.34'
6	N89°44'00"W 153.48'
7	S66°29'51"W 44.71'
8	N89°45'41"W 147.02'
9	S61°04'48"W 20.42'

EASEMENT LEGEND:

1 WEST VALLEY FEEDER No. 2 PERMANENT EASEMENT PER OR 77-679016
2 WEST VALLEY FEEDER No. 1 PERMANENT EASEMENT PER OR D2582/733

PREPARED BY:
BENNER AND CARPENTER, INC.
506 EAST MAIN STREET
SANTA PAULA, CA 93060
(805) 525-3396

EXHIBIT "B-6"

SKETCH TO ACCOMPANY LEGAL DESCRIPTION FOR TEMPORARY EASEMENT

EXHIBIT "A-20"

LEGAL DESCRIPTION

FOR TEMPORARY EASEMENT

(PORTION OF APN 2723-010-904)

Being a strip of land, 10.00 feet wide, in the City of Los Angeles, County of Los Angeles, State of California, over a portion of the Northwest Quarter of Section 13, Township 2 North, Range 17 West, San Bernardino Meridian, said strip of land being adjacent and southeasterly, southerly and westerly of a strip of land, 30.00 feet wide, the centerline of said 30.00 foot wide strip of land described as follows:

Beginning at a point in the southerly line of the lands described in Resolution No. 2529, recorded July 3, 1958, as Instrument No. 1112 of Official Records of Los Angeles County, said point bears North 89°44'19" West 21.36 feet from the southeasterly corner of said lands; thence North 0°01'18" East 79.41 feet; thence West 365.82 feet; thence South 45°00'17" West 130.70 feet; thence West 434.53 feet; thence North 45°03'51" West 68.34 feet; thence North 89°44'00" West 153.48 feet; thence South 66°29'51" West 44.71 feet; thence North 89°45'41" West 147.02 feet; thence South 61°04'48" West 94.58 feet; thence South 89°23'52" West 43.57 feet; thence South 45°09'38" West 225.76 feet; thence South 53°52'19" West 69.40 feet, along a line hereinafter referred to as "Line A", to the intersection with the westerly line of the lands described in the Grant Deed recorded January 24, 1991, as Instrument No. 91-103605 of Official Records of Los Angeles County; thence along said westerly line South 0°18'32" West 6.22 feet to the intersection with a line, parallel with and 5.00 feet southeasterly of, measured at right angles, "Line A" hereinabove described, said point being the True Point of Beginning of this description; thence along said parallel line,

1st: South 53°52'19" West 142.05 feet; thence,

2nd: North 88°55'57" West 435.95 feet; thence,

3rd: North 70°38'05" West 56.94 feet; thence,

4th: South 87°50'39" West 47.00 feet; thence,

5th: North 65°57'11" West 159.30 feet; thence,

6th: North 75°16'19" West 283.27 feet; thence,

7th: North 9°00'00" East 240.35 feet to the intersection with the southerly line of the lands described in the Grant Deed recorded May 26, 1966, as Instrument No. 3387 in Book D3317, Page 835 of Official Records of Los Angeles County.

The sidelines of said strip of land to be lengthened or shortened to terminate northerly in the southerly line of said Instrument No. 3387.

EXCEPTING THEREFROM any portion of said 10.00 foot wide strip of land which does not lie within the lands described in the Grant Deed recorded June 27, 1966, as Instrument No. 2656 of Official Records of Los Angeles County.

Containing 10,538 square feet, more or less.

Larry Frager 6/1/22

Larry J. Frager, P.L.S. 7998 Date



REF: 17071LD20B.DWG
DATE: 5/9/2022

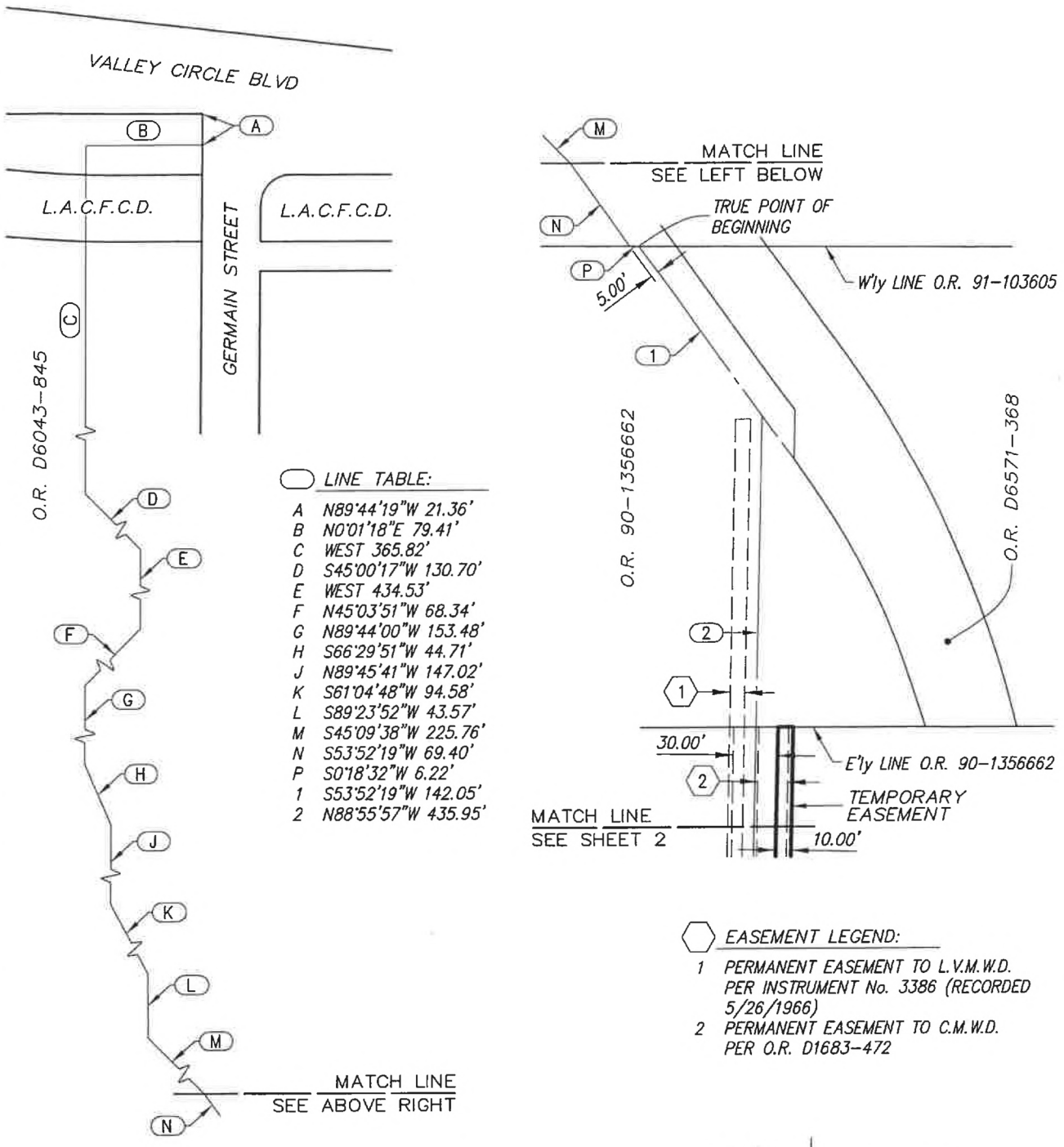

LINE TABLE:

A	N89°44'19"W 21.36'
B	N0°01'18"E 79.41'
C	WEST 365.82'
D	S45°00'17"W 130.70'
E	WEST 434.53'
F	N45°03'51"W 68.34'
G	N89°44'00"W 153.48'
H	S66°29'51"W 44.71'
J	N89°45'41"W 147.02'
K	S61°04'48"W 94.58'
L	S89°23'52"W 43.57'
M	S45°09'38"W 225.76'
N	S53°52'19"W 69.40'
P	S0°18'32"W 6.22'
1	S53°52'19"W 142.05'
2	N88°55'57"W 435.95'

EASEMENT LEGEND:

1 PERMANENT EASEMENT TO L.V.M.W.D. PER INSTRUMENT No. 3386 (RECORDED 5/26/1966)

2 PERMANENT EASEMENT TO C.M.W.D. PER O.R. D1683-472

SCALE: 1"=100'

EXHIBIT "B-20"

SKETCH TO ACCOMPANY LEGAL DESCRIPTION FOR TEMPORARY EASEMENT

SKETCH SHEET 1 OF 2

PREPARED BY:
BENNER AND CARPENTER, INC.
506 EAST MAIN STREET
SANTA PAULA, CA 93060
(805) 525-3396

REF: 17071LD20B.DWG
DATE: 4/20/2022

LINE TABLE:

2	N88°55'57"W 435.95'
3	N70°38'05"W 56.94'
4	S87°50'39"W 47.00'
5	N65°57'11"W 159.30'
6	N75°16'19"W 283.27'
7	N9°00'00"E 240.35'

EASEMENT LEGEND:

1 PERMANENT EASEMENT TO L.V.M.W.D. PER INSTRUMENT No. 3386 (RECORDED 5/26/1966)
2 PERMANENT EASEMENT TO C.M.W.D. PER O.R. D1683-472

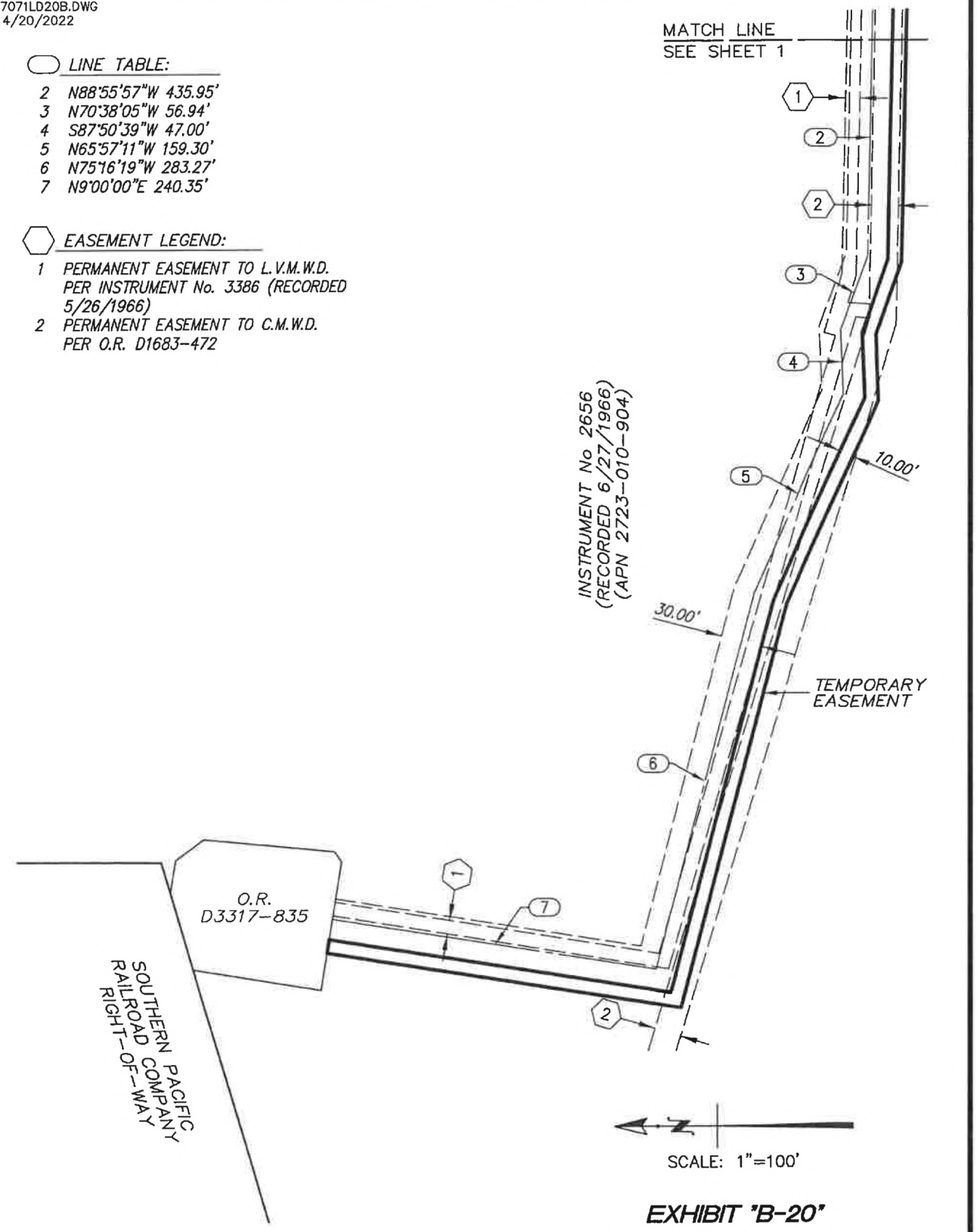

EXHIBIT "B-20"

SKETCH TO ACCOMPANY LEGAL DESCRIPTION FOR TEMPORARY EASEMENT

SKETCH SHEET 2 OF 2

PREPARED BY:
BENNER AND CARPENTER, INC.
506 EAST MAIN STREET
SANTA PAULA, CA 93060
(805) 525-3396

RESOLUTION NO. _____

WHEREAS, the Las Virgenes Municipal Water District (LVMWD), as part of the Twin Lakes Pump Station Project, is constructing a water pipeline through eleven (11) properties including Chatsworth Park North and Chatsworth Park South;

WHEREAS, the Twin Lakes Pump Station Project (Project) will supplement water to Calabasas and Agora areas, including City of Los Angeles' community in Chatsworth;

WHEREAS, the Project requires easements from RAP through Chatsworth Park North and Chatsworth Park South to provide for their growing community's water needs, which includes City residents;

WHEREAS, the easement agreements include the right to inspect, construct, maintain, repair, and replace a water pipeline within the real property of 22300 W. Chatsworth Street and 22360 W. Devonshire Street;

WHEREAS, approval of the proposed easements will not be a detriment to RAP operations;

WHEREAS, the Board of Recreation and Park Commissioners (Board) has directed the Board Secretary to concurrently transmit forthwith the proposed easement agreements to the City Attorney for review as to form and legality, and to the City Council for approval by ordinance;

WHEREAS, the Board has authorized RAP staff to request the assistance of the Department of General Services (GSD) and the Office of the City Attorney in the review and processing of the related documents, including but not limited to the easement agreements; and,

WHEREAS, upon receipt of the necessary approvals, the Board authorizes the Board President and Secretary to execute the easement agreements, subject to City Attorney review and approval as to form and legality;

NOW, THEREFORE, BE IT RESOLVED that the Board approves the construction, operation, and maintenance of the described area of park property for use as a water pipeline;

BE IT FURTHER RESOLVED that the Board finds and determines that the public interest, convenience, and necessity require that the easements be granted to LVMWD required for the Project, subject to the approval of the City Council and the City Attorney, whereupon the Board President is authorized to execute the easement agreements;

BE IT FURTHER RESOLVED that upon City Council approval of the easement to LVMWD, that City Council direct/instruct RAP staff and the City Attorney's Office to draft and process any required document necessary to process said easement agreements.

I HEREBY CERTIFY that the foregoing is a full, true and correct copy of a Resolution adopted by the Board of Recreation and Park Commissioners of the City of Los Angeles at its meeting held on August 1, 2024 (Board Report No. _____)

_____
Takisha Sardin, Board Secretary

LAS VIRGENES MUNICIPAL WATER DISTRICT
TWIN LAKES PUMP STATION PIPELINE

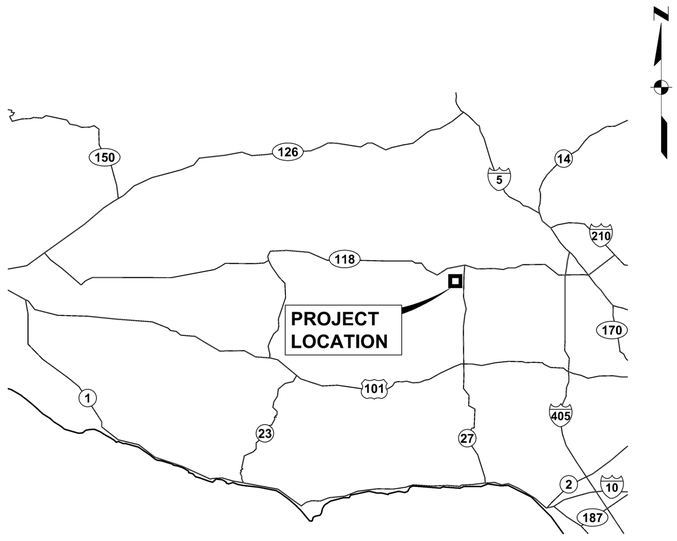

VICINITY MAP
NOT TO SCALE

SHEET NO.	INDEX
1	VICINITY MAP, LOCATION MAP, AND SHEET INDEX
2	ABBREVIATIONS, LEGEND, AND GENERAL NOTES
3	KEY PLAN, SURVEY CONTROL, AND SURVEY NOTES
4	PIPELINE PLAN AND PROFILE STA 0+93 TO STA 11+00
5	PIPELINE PLAN AND PROFILE STA 11+00 TO STA 21+00
6	PIPELINE PLAN AND PROFILE STA 21+00 TO STA 31+00
7	PIPELINE PLAN AND PROFILE STA 31+00 TO STA 41+00
8	PIPELINE PLAN AND PROFILE STA 41+00 TO STA 45+71
9	PIPELINE, VALVE, AND SURGE TANK MODIFICATIONS SITE PLAN
10	MISCELLANEOUS DETAILS I
11	MISCELLANEOUS DETAILS II
12	MISCELLANEOUS DETAILS III
13	CATHODIC PROTECTION DETAILS
14	ELECTRICAL LEGEND AND ABBREVIATIONS
15	ELECTRICAL DETAILS
16	ELECTRICAL SITE PLAN
17	VAULT PLAN, PANEL SCHEDULE, CONDUIT AND WIRE SCHEDULE
18	INSTRUMENTATION LEGEND AND ABBREVIATIONS
19	P&ID

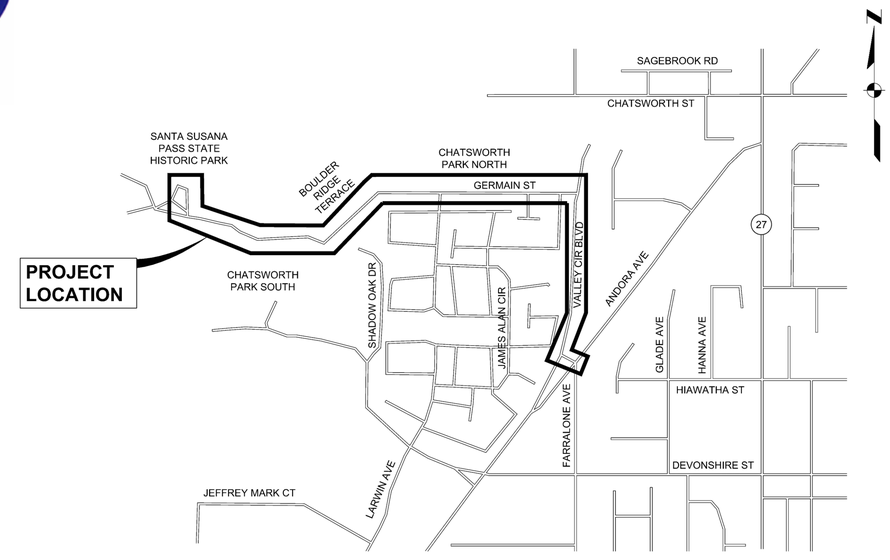

LOCATION MAP
0 500 1000
1"=500'

100% NOT FOR CONSTRUCTION

DESIGN:	RN
DRAWN:	EA
CHECKED:	MW

ENGINEER'S SEAL

REV. NO.	DATE	DESCRIPTION	APPVD.	DATE

REVISIONS

LAS VIRGENES MUNICIPAL WATER DISTRICT

TWIN LAKES PUMP STATION PIPELINE

VICINITY MAP, LOCATION MAP, AND SHEET INDEX

PREPARED BY:
LVMWD ENGINEERING
4232 LAS VIRGENES ROAD
CALABASAS, CALIFORNIA 91302

APPROVED FOR LAS VIRGENES MUNICIPAL WATER DISTRICT
BY: _____
PRINCIPAL ENGINEER
R.C.E.
DATE: _____

SCALE:

DATE:

SHEET 1 OF 19

Q:\Ventura\2017\1744213 00_LVMWD_Twin_Lakes_Pipeline\10-EngDesign\10.02-Cntrct-RefDwgs\CAD\1744213.00-SHEET-01.dwg 10/19/2022 2:12 PM ERICK ALMALEL

ABBREVIATIONS

AC, A.C.	ASPHALT CONCRETE
ACP	ASBESTOS CEMENT PIPE
ARV	AIR RELEASE VALVE
ASSY	ASSEMBLY
AVE	AVENUE
AVRV	AIR/VACUUM RELIEF VALVE
AWWA	AMERICAN WATER WORKS ASSOCIATION
BF	BLIND FLANGE
BFV	BUTTERFLY VALVE
BLVD	BOULEVARD
BM	BENCH MARK
BO	BLOWOFF
BOC	BACK OF CURB
BOT, BOTT	BOTTOM
CHTR	CHARTER COMMUNICATIONS
CL, ℄	CENTERLINE
CLR	CLEAR(ANCE)
CONC	CONCRETE
CONT	CONTINU(ED), (OUS)
CP	CONTROL POINT, CATHODIC PROTECTION
CTS	CATHODIC TEST STATION
DIA, Ø	DIAMETER
DWG(S)	DRAWING(S)
E	ELECTRICAL, EAST
EA	EACH
EL., ELEV	ELEVATION
ELECT	ELECTRICAL
EXIST, (E)	EXISTING
FCA	FLANGE COUPLING ADAPTER
FH	FIRE HYDRANT
FLG	FLANGE
FT	FOOT
G	GAS
GALV	GALVANIZED
H, HT	HEIGHT
HORIZ.	HORIZONTAL
IN	INCHES
INV	INVERT
LA	CITY OF LOS ANGELES
LADWP	LOS ANGELES DEPARTMENT OF WATER AND POWER
LVMWD	LAS VIRGENES MUNICIPAL WATER DISTRICT
MAX	MAXIMUM
MECH	MECHANICAL
MH	MANHOLE
MIN	MINIMUM
MISC	MISCELLANEOUS
MWD	METROPOLITAN WATER DISTRICT
N	NORTH
N/A	NOT APPLICABLE
NGVD	NATIONAL GEODETIC VERTICAL DATUM
NIC	NOT IN CONTRACT
NO.	NUMBER
NTS	NOT TO SCALE
OD	OUTSIDE DIAMETER
POC	POINT OF CONNECTION
PRV	PRESSURE REDUCING VALVE
PSI	POUNDS PER SQUARE INCH
PVC	POLYVINYL CHLORIDE
R.C.E.	REGISTERED CIVIL ENGINEER
REQ'D	REQUIRED
REV	REVISION
R/W	RIGHT OF WAY
S	SEWER, SOUTH
SCG	SOUTHERN CALIFORNIA GAS COMPANY
SD	STORM DRAIN
SDMH	STORM DRAIN MANHOLE
SECT	SECTION
SF	SQUARE FOOT
SHT	SHEET
SPEC(S)	SPECIFICATION(S)
SQ	SQUARE
ST	STREET
STA	STATION
STD	STANDARD
STL	STEEL
SWPPP	STORMWATER POLLUTION PREVENTION PLAN
TYP	TYPICAL
V, VERT	VERTICAL
W	WATER, WEST
W/	WITH
WMH	WATER MANHOLE
W/O	WITHOUT
WV	WATER VALVE
WWF	WELDED WIRE FABRIC
#	POUND, NUMBER
&	AND
@	AT
'	FOOT
"	INCH

LEGEND

- STEEL IN SECTION
- EARTH IN SECTION
- CONCRETE IN SECTION
- GRAVEL IN SECTION
- WOOD IN SECTION
- AC IN SECTION
- REFERENCE POINT
- EXISTING STRUCTURE (E)
- NEW STRUCTURE (N)
- 4750 — CONTOUR ELEVATION LINE
- FENCE LINE
- UTILITY POLE W/ GUY WIRE
- 10+00 — PIPELINE ALIGNMENT
- AIR/VACUUM RELEASE VALVE
- BLOWOFF ASSEMBLY
- PIPE IN PROFILE
- BUTTERFLY VALVE
- PIPE MATERIAL CHANGE
- EASEMENT
- 10"G — EXISTING GAS PIPELINE
- E — EXISTING BURIED ELECTRICAL
- 10"S — EXISTING SEWER
- 10"SD — EXISTING STORM DRAIN
- 10"W — EXISTING WATER LINE
- ESMT — EXISTING EASEMENT
- PROPERTY LINE/RIGHT-OF-WAY
- CENTERLINE
- EXISTING STREETLIGHT
- EXISTING FIRE HYDRANT
- SURVEY CONTROL POINT

SECTION OR DETAIL REFERENCE

SECTION (LETTER) / DETAIL (NUMBER) → 1 / SHT 9 ← DRAWING NUMBER DRAWN ON

CONSTRUCTION NOTES

GENERAL

1. NOTIFY DAVID PREACH OF METROPOLITAN WATER DISTRICT'S OPERATIONS SERVICES BRANCH AT EITHER (818)832-2314 (WORK) OR (861)816-3068 (CELL) AT LEAST TWO WORKING DAYS PRIOR TO STARTING ANY WORK NEAR EXISTING METROPOLITAN FACILITIES.
2. MATERIALS USED AND ALL WORK TO BE PERFORMED SHALL BE IN ACCORDANCE WITH THE LOS ANGELES COUNTY CODE, DIVISION I, TITLE 20.
3. MATERIALS USED AND ALL WORK TO BE PERFORMED SHALL BE APPROVED BY LVMWD AND BE IN ACCORDANCE WITH THE CURRENT LVMWD STANDARD SPECIFICATIONS, STANDARD DRAWINGS, AND WATER ORDINANCE. THE CONTRACTOR WILL BE REQUIRED TO HAVE A SET OF THESE SPECIFICATIONS AND DRAWINGS ON SITE AT ALL TIMES.
4. A MINIMUM OF 48 HOURS PRIOR TO START OF CONSTRUCTION, THE CONTRACTOR SHALL ARRANGE FOR A PRE-CONSTRUCTION MEETING WITH THE LVMWD CONSTRUCTION SUPERVISOR (818) 251-2139. CONTRACTOR SHALL APPLY FOR INSPECTION FROM LVMWD AT (818) 251-2139 AT LEAST 24 HOURS IN ADVANCE.
5. THE CONTRACTOR SHALL VERIFY LOCATION, DEPTH, VERTICAL AND HORIZONTAL ALIGNMENT AND PROTECT IN PLACE ALL EXISTING UTILITIES AND UNDERGROUND STRUCTURES.
6. PIPE IS EITHER AWWA C-200 STEEL CMC/CML, OR AWWA C-900 PLASTIC PIPE WITH GRIP-TITE JOINTS. PLASTIC PIPE TO CONFORM TO CAST IRON PIPE SIZE. PVC WILL NOT BE USED IN EASEMENT AREAS WHERE THERE ARE NO STREET IMPROVEMENTS. PIPE TO MEET LATEST LVMWD STANDARDS AND SPECIFICATIONS. THE CONTRACTOR IS TO OBTAIN APPROVAL OF PIPE JOINTS HE PROPOSES TO USE.
7. ALL WATERLINE ELEVATIONS SHOWN ON PLANS ARE CENTERLINE OF PIPE UNLESS OTHERWISE NOTED.
8. AIR AND VACUUM VALVES, BLOW-OFFS, AND FIRE HYDRANTS SHALL BE LOCATED AS SHOWN ON LVMWD STANDARD DRAWINGS NO. PW-127 & PW-128, AND AS DESCRIBED IN LVMWD STANDARD SPECIFICATIONS.
9. PRIOR TO WATERLINE CONSTRUCTION, THE CONTRACTOR IS REQUIRED TO SUBMIT TRENCH GRADE SHEETS TO CONSTRUCTION SUPERVISOR AT LVMWD. GRADE SHEETS SHALL SHOW STATIONING, FINISH SURFACE ELEVATIONS, HUB ELEVATIONS, AND CUT/FILL TO TOP OF PIPE.
10. FOR WATER SERVICE DURING CONSTRUCTION, CONTACT CUSTOMER SERVICE REPRESENTATIVE AT (818) 880-4110 REGARDING SERVICE APPLICATION AND WATER COSTS.
11. UNLESS OTHERWISE SHOWN, MINIMUM COVER SHALL BE 42-INCHES FROM FINISH SURFACE.
12. PROVISIONS MUST BE MADE FOR TEMPORARY FILLING CONNECTIONS, DISINFECTION, PRESSURE TESTING, AND FLUSHING AND DRAINING. THESE PROVISIONS TO BE PRESENTED TO LVMWD CONSTRUCTION SUPERVISOR, FOR APPROVAL, PRIOR TO THE START OF CONSTRUCTION.
13. SHOP DRAWINGS FOR STEEL PIPE AND FITTINGS, INCLUDING PIPE LAYOUT SHEETS SHOWING JOINTS, SHALL BE SUBMITTED FOR APPROVAL BY DISTRICT'S REPRESENTATIVE PRIOR TO FABRICATION OF THE PIPE AND FITTINGS.

UTILITIES

1. THE EXISTENCE AND LOCATION OF THE UTILITIES AND FACILITIES SHOWN ON THESE DRAWINGS WERE OBTAINED FROM THE BEST AVAILABLE RECORDS. THE CONTRACTOR SHALL TAKE THE NECESSARY PRECAUTIONARY MEASURES TO PROTECT THE UNDERGROUND UTILITIES AND FACILITIES DURING CONSTRUCTION. REFER TO POTHOLING REQUIREMENTS IN THE EARTHWORK SPECIFICATION. THE CONTRACTOR MUST NOTIFY THE UTILITY OWNERS PRIOR TO ANY CONSTRUCTION.
2. IT SHALL BE THE RESPONSIBILITY OF THE CONTRACTOR TO LOCATE ALL SUBSTRUCTURES, WHETHER SHOWN HEREON OR NOT, AND PROTECT THEM FROM DAMAGE. THE EXPENSE OF REPAIR OR REPLACEMENT OF SAID SUBSTRUCTURES SHALL BE BORNE BY THE CONTRACTOR.
3. UPON LEARNING OF THE EXISTENCE AND LOCATIONS OF ANY UNDERGROUND FACILITIES NOT SHOWN OR SHOWN INACCURATELY ON THESE PLANS OR NOT PROPERLY MARKED BY THE UTILITY OWNER, THE CONTRACTOR SHALL IMMEDIATELY NOTIFY THE UTILITY OWNER AND THE ENGINEER BY TELEPHONE AND IN WRITING.
4. CONTRACTOR SHALL PROVIDE ADEQUATE HORIZONTAL AND VERTICAL SEPARATION BETWEEN PROPOSED WATER LINE AND EXISTING NON-POTABLE PIPELINES. REFER TO CALIFORNIA CODE OF REGULATIONS, TITLE 22, DIVISION 4, CHAPTER 16, SECTION 64572 AND TO LVMWD STANDARD DRAWING No. PW-102.

OPERATION REQUIREMENTS

1. THE CONTRACTOR SHALL DESIGNATE, AND KEEP ON THE PROJECT AT ALL TIMES DURING ITS PROGRESS, A COMPETENT SUPERINTENDENT WHO SHALL NOT BE REPLACED WITHOUT A WRITTEN NOTICE TO THE OWNER'S REPRESENTATIVE. THE SUPERINTENDENT WILL BE THE CONTRACTOR'S REPRESENTATIVE AT THE SITE AND SHALL HAVE AUTHORITY TO ACT ON BEHALF OF THE CONTRACTOR. ALL COMMUNICATIONS GIVEN TO THE SUPERINTENDENT SHALL BE AS BINDING AS IF GIVEN TO THE CONTRACTOR. DURING PERIODS WHEN THE WORK IS SUSPENDED, THE CONTRACTOR SHALL MAKE APPROPRIATE ARRANGEMENTS FOR ANY EMERGENCY WORK WHICH MAY BE REQUIRED.
2. IN ACCORDANCE WITH GENERALLY ACCEPTED CONSTRUCTION PRACTICES, THE CONTRACTOR SHALL BE SOLELY AND COMPLETELY RESPONSIBLE FOR CONDITIONS OF THE JOB SITE, INCLUDING SAFETY OF ALL PERSONS AND PROPERTY. THIS REQUIREMENT SHALL APPLY CONTINUOUSLY AND NOT BE LIMITED TO NORMAL WORKING HOURS. THE CONTRACTOR SHALL FULLY COMPLY WITH ALL STATE, FEDERAL, AND OTHER LAWS, RULES, REGULATIONS, AND ORDERS RELATING TO SAFETY OR WORKERS AND ALL OTHERS. THIS MAY INCLUDE THE ISSUANCE OF PERSONAL PROTECTIVE EQUIPMENT.
3. THE CONTRACTOR SHALL DEFEND, INDEMNIFY AND HOLD THE OWNER AND THE ENGINEER HARMLESS FROM ANY AND ALL LIABILITY, REAL OR ALLEGED, IN CONNECTION WITH THE PERFORMANCE OF WORK ON THIS PROJECT EXCEPTING FOR LIABILITY ARISING FROM SOLE NEGLIGENCE OF THE OWNER OR THE ENGINEER.
4. THE CONTRACTOR SHALL SO CONDUCT HIS OPERATIONS AS TO OFFER THE LEAST POSSIBLE OBSTRUCTION INCONVENIENCE TO THE PUBLIC, AND SHALL HAVE UNDER CONSTRUCTION NO GREATER LENGTH OR AMOUNT OF WORK THAT CAN BE PERFORMED PROPERLY WITH DUE REGARD TO THE RIGHTS OF THE PUBLIC. CONVENIENT ACCESS TO DRIVEWAYS, AND BUILDINGS ALONG THE LINE OF WORK SHALL BE MAINTAINED AND TEMPORARY CROSSINGS SHALL BE PROVIDED AND MAINTAINED IN GOOD CONDITION.
5. CONSTRUCTION ACTIVITY SHALL BE LIMITED TO THE HOURS REFERENCED HEREIN AND IN THE SPECIFICATIONS OR THE CITY OF LOS ANGELES ENCROACHMENT AND ROAD PERMITS.
6. THE CONTRACTOR SHALL COORDINATE DELIVERY OF ALL PIPE AND APPURTENANCES WITH PIPE MANUFACTURER AND SHALL BE RESPONSIBLE FOR ALL UNLOADING, STORAGE AND ONSITE PROTECTION.
7. ALL EXCAVATION AND TRENCHING MUST BE COVER PLATED WITH STEEL PLATES AND SHALL BE RECESSED IN THE PAVEMENT AND PLACED FLUSH WITH THE PAVEMENT SURFACE. COVER PLATES SHALL BE NON-SKID.
8. THE CONTRACTOR SHALL OBTAIN CONSTRUCTION WATER FROM THE OWNER'S ONSITE SOURCES. REFER TO SPECIFICATION SECTION 01500.
9. THE CONTRACTOR SHALL BE RESPONSIBLE FOR ALL DEWATERING, DIVERSION OR CONTROL OF WATER ON THIS PROJECT. REFER TO SPECIFICATION SECTION 02300.3.01.
10. THE CONTRACTOR SHALL NOTIFY THE FOLLOWING AGENCIES AT LEAST 48 HOURS IN ADVANCE OF CONSTRUCTION: USA ALERT 811, LVMWD, CITY OF LOS ANGELES, AND OTHERS IDENTIFIED IN SPECIFICATION SECTION 01550.
11. THE CONTRACTOR SHALL VERIFY THE EXACT LOCATION OF AIR AND VACUUM RELIEF VALVES, BLOW-OFFS AND OTHER NOTABLE APPURTENANCES WITH THE DISTRICT REPRESENTATIVE IN THE FIELD.

SWPPP

1. CONTRACTOR SHALL PRACTICE ALL THE APPROPRIATE (BEST MANAGEMENT PRACTICES) BMPs AT ALL TIMES DURING THE PROJECT CONSTRUCTION. REFER TO SPECIFICATION SECTIONS 01070 AND 01140 FOR SWPPP AND ENVIRONMENTAL PROTECTION REQUIREMENTS.
2. THE CONTRACTOR SHALL MAINTAIN THE WORK AREA IN A NEAT, CLEAN AND SANITARY CONDITION AT ALL TIMES AND TO THE SATISFACTION OF THE AGENCY/OWNER HAVING THE JURISDICTION OVER THE AREA. STREETS SHALL BE KEPT CLEAN OF DEBRIS, WITH DUST AND OTHER NUISANCES BEING CONTROLLED AT ALL TIMES. MECHANICAL CLEANING WITH A STREET SWEEPER WILL BE REQUIRED. THE CONTRACTOR SHALL ALSO BE RESPONSIBLE FOR ANY CLEAN UP ON ADJACENT STREETS AFFECTED BY THE CONSTRUCTION.
3. ALL CATCH BASINS WITHIN 50 FEET OF THE CONSTRUCTION OR DOWNSTREAM OF CONSTRUCTION WHERE SEDIMENTS AND OTHER POLLUTANTS COULD NATURALLY DRAIN SHALL BE TEMPORARILY PROTECTED WITH SANDBAGS. SANDBAGS MUST BE MAINTAINED THROUGHOUT PROJECT DURATION BY THE CONTRACTOR.
4. NO EXCAVATED MATERIAL SHALL BE PLACED ON ROAD MEDIANS.

PRESSURE TESTING AND DISINFECTION

1. THE INSIDE OF ALL PIPE FITTINGS, VALVES, AND HYDRANTS TO BE INSTALLED ADJACENT TO EXISTING WATER SYSTEMS SHALL BE THOROUGHLY WASHED AND DISINFECTED FOLLOWING THE PROCEDURES OUTLINED IN SPECIFICATION SECTION 11003.
2. ALL WATER PIPES SHALL BE PRESSURE TESTED AND DISINFECTED PER THE SPECIFICATIONS. THE CONTRACTOR SHALL FURNISH ALL EQUIPMENT, LABOR, AND MATERIALS NECESSARY TO PERFORM SUCH TESTS AND DISINFECTION.
3. LVMWD WILL COLLECT WATER SAMPLES FOR BACTERIOLOGICAL ANALYSES.

RESTORATION

1. THE CONTRACTOR SHALL REPLACE ALL SIGNS, CURBS, GUTTERS, PAVEMENT MARKERS, INCLUDING STRIPING AND STENCILING, LANDSCAPING, LOOP DETECTORS, FENCING, SIGNAGE AND OTHER OBJECTS DESTROYED OR REMOVED TEMPORARILY DUE TO CONSTRUCTION OPERATIONS. THE SURROUNDINGS SHALL BE RETURNED TO ORIGINAL CONDITION AFTER COMPLETION OF THE WORK TO THE SATISFACTION OF THE CITY OF LOS ANGELES, COUNTY OF LOS ANGELES AND/OR LVMWD.
2. THE CONTRACTOR SHALL REPLACE ALL LOOP DETECTORS DESTROYED OR DAMAGED DUE TO CONSTRUCTION OPERATIONS WITHIN TWO DAYS OF DAMAGE.
3. RESTORE THE FINISHED GRADE TO ORIGINAL CONTOURS AND DRAINAGE PATTERNS.

AC AND CONCRETE PAVEMENT REMOVAL

1. ALL PAVEMENT REMOVAL SHALL BE SAWCUT TO TRUE LINES ADJACENT TO EXISTING PAVEMENT. REFER TO SPECIFICATION SECTION 02700.
2. ALL DISTURBED CONCRETE PAVING, CURBS, SIDEWALKS, AND GUTTERS SHALL BE REMOVED TO NEAREST SCORE LINE OR CONSTRUCTION JOINT AND REPLACED TO MATCH EXISTING. REFER TO SPECIFICATION SECTION 02775.
3. WHERE THE TRENCH IS LESS THAN TWO (2) FEET FROM THE EDGE OF THE CONCRETE GUTTER OR EDGE OF PAVEMENT, THE CONTRACTOR SHALL COLD MILL A MINIMUM OF 1-INCH FROM THE TRENCH SAWCUT LINE TO THE EDGE OF THE GUTTER OR PAVEMENT EDGE FOR FINAL PAVEMENT PLACEMENT.

100% NOT FOR CONSTRUCTION

DESIGN:	RN
DRAWN:	EA
CHECKED:	MW

ENGINEER'S SEAL

REV. NO.	DATE	DESCRIPTION	APPVD.	DATE

REVISIONS

LAS VIRGENES MUNICIPAL WATER DISTRICT

TWIN LAKES PUMP STATION PIPELINE

ABBREVIATIONS, LEGEND, AND GENERAL NOTES

PREPARED BY:

LVMWD ENGINEERING
4232 LAS VIRGENES ROAD
CALABASAS, CALIFORNIA 91302

APPROVED FOR LAS VIRGENES MUNICIPAL WATER DISTRICT

BY: _____

PRINCIPAL ENGINEER
R.C.E.

DATE: _____

SCALE:

DATE:

SHEET 2 OF 19

Q:\Ventura\2017\1744213.00_LVMWD_Twin_Lakes_Pipeline\10-EngDesign\10.02-Cntrct-RefDwgs\CAD\1744213.00-SHEET-02.dwg ERICK ALMALEL 10/19/2022 2:12 PM

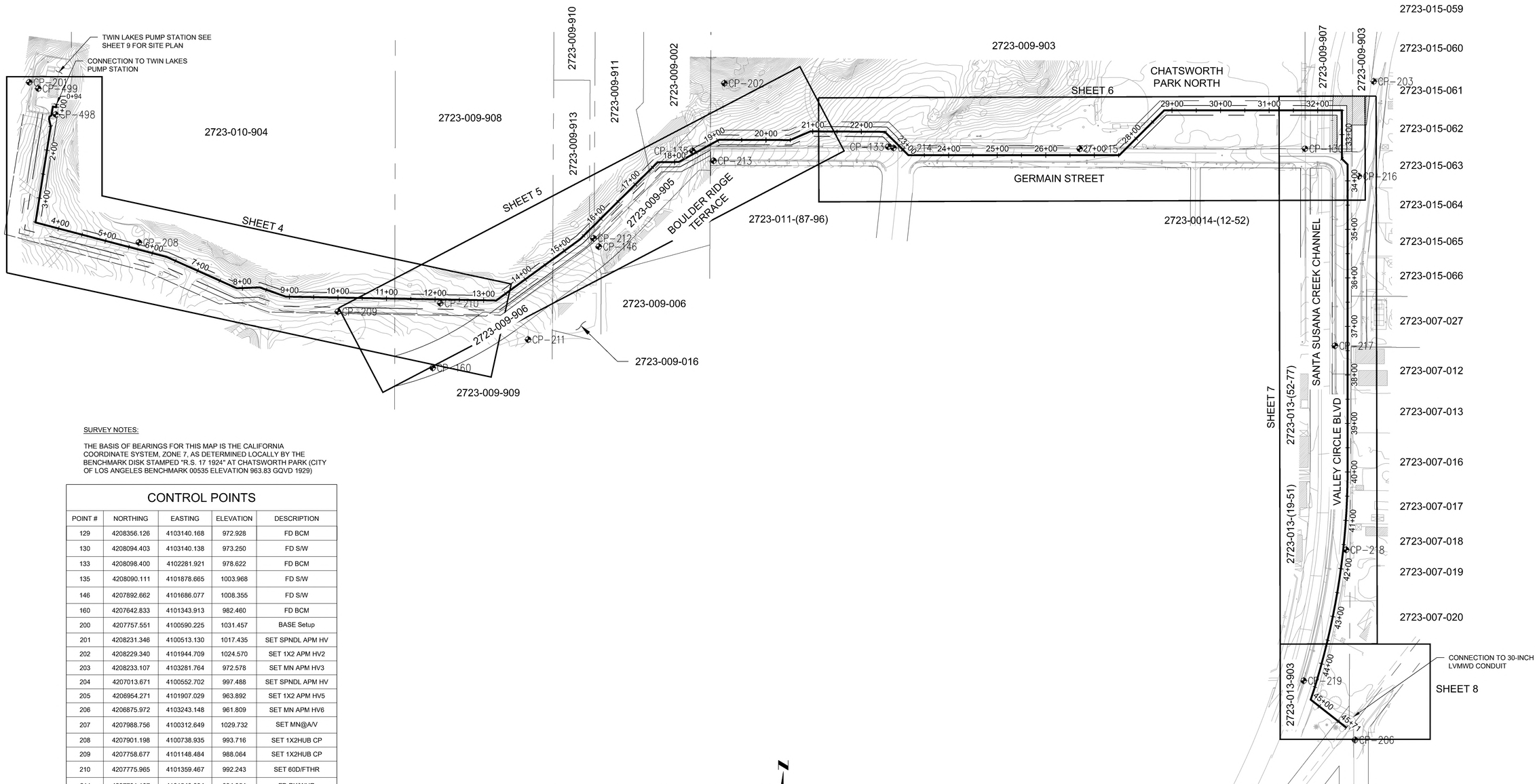

SURVEY NOTES:

THE BASIS OF BEARINGS FOR THIS MAP IS THE CALIFORNIA COORDINATE SYSTEM, ZONE 7, AS DETERMINED LOCALLY BY THE BENCHMARK DISK STAMPED "R.S. 17 1924" AT CHATSWORTH PARK (CITY OF LOS ANGELES BENCHMARK 00535 ELEVATION 963.83 GQVD 1929)

CONTROL POINTS

POINT #	NORTHING	EASTING	ELEVATION	DESCRIPTION
129	4208356.126	4103140.168	972.928	FD BCM
130	4208094.403	4103140.138	973.250	FD S/W
133	4208098.400	4102281.921	978.622	FD BCM
135	4208090.111	4101878.665	1003.968	FD S/W
146	4207892.662	4101686.077	1008.355	FD S/W
160	4207642.833	4101343.913	982.460	FD BCM
200	4207757.551	4100590.225	1031.457	BASE Setup
201	4208231.346	4100513.130	1017.435	SET SPNDL APM HV
202	4208229.340	4101944.709	1024.570	SET 1X2 APM HV2
203	4208233.107	4103281.764	972.578	SET MN APM HV3
204	4207013.671	4100552.702	997.488	SET SPNDL APM HV
205	4206954.271	4101907.029	963.892	SET 1X2 APM HV5
206	4206875.972	4103243.148	961.809	SET MN APM HV6
207	4207988.756	4100312.649	1029.732	SET MN@A/V
208	4207901.198	4100738.935	993.716	SET 1X2HUB CP
209	4207758.677	4101148.484	988.064	SET 1X2HUB CP
210	4207775.965	4101359.467	992.243	SET 60D/FTHR
211	4207701.107	4101540.304	994.954	FD PK/WHR
212	4207909.754	4101675.089	1009.448	SET CUP TACK VLT
213	4208069.608	4101922.334	996.235	SCRB X @GATE
214	4208095.974	4102292.976	979.363	SET MN TB@LARW
215	4208094.046	4102676.216	970.880	SET MN TB
216	4208037.611	4103251.174	971.677	SET MN CP
217	4207688.353	4103201.909	967.430	SCRB X ON CURB
218	4207267.853	4103224.865	964.327	SET MN CP
219	4206998.116	4103137.470	962.887	SCRB X ON CURB
220	4206093.630	4102544.104	952.912	SET MN CP
221	4206187.443	4104519.330	961.078	LA CITY BM(00541
222	4206234.554	4104473.105	963.829	USGS BM RS17 192
498	4208164.969	4100567.628	1009.875	MAG@PUMP
499	4208218.493	4100531.687	1011.147	MAG@PUMP

100% NOT FOR CONSTRUCTION

KEY MAP-TWIN LAKES PUMP STATION PIPELINE

0 100 200
1"=100'

N

DESIGN:	RN
DRAWN:	EA
CHECKED:	MW

ENGINEER'S SEAL

REV. NO.	DATE	DESCRIPTION	APPVD.	DATE

REVISIONS

LAS VIRGENES MUNICIPAL WATER DISTRICT

TWIN LAKES PUMP STATION PIPELINE

KEY PLAN, SURVEY CONTROL, AND SURVEY NOTES

PREPARED BY:
LVMWD ENGINEERING
4232 LAS VIRGENES ROAD
CALABASAS, CALIFORNIA 91302

APPROVED FOR LAS VIRGENES MUNICIPAL WATER DISTRICT
BY: _____
PRINCIPAL ENGINEER
R.C.E.
DATE: _____

SCALE: HORIZONTAL: 1" = 100'

DATE:

SHEET 3 OF 19

ERICK ALMALEL 10/19/2022 2:13 PM

Q:\Ventura\2017\1744213.00_LVMWD_Twin_Lakes_Pipeline\10-EngDesign\10.02-Cntrct-RefDwgs\CAD\1744213.00-SHEET-03.dwg

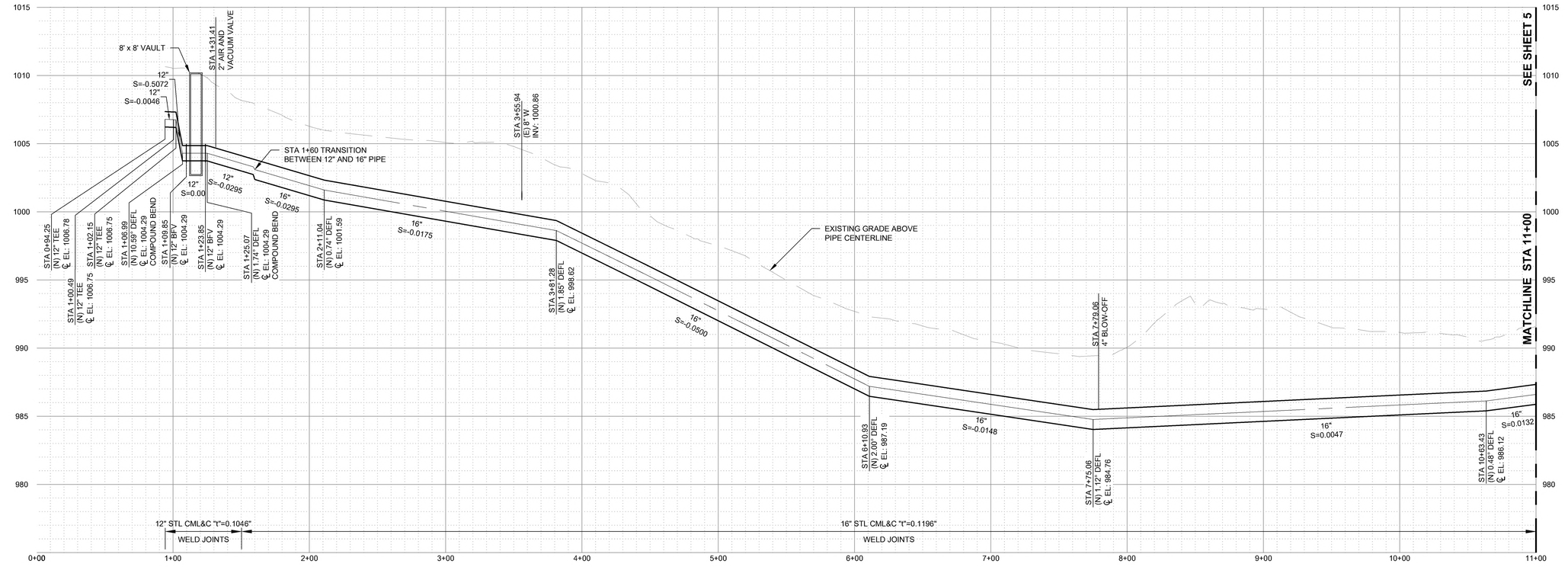

NOTES:

1. CONTRACTOR TO POTHOLE CONNECTION TO VERIFY LOCATION, ELEVATION, AND SIZE.
2. LOCATE BLOW-OFF OR AIR VACUUM VALVE PER LVMWD STANDARD DWG PW-128 AND IN ACCORDANCE WITH THE DISTRICT REPRESENTATIVE IN THE FIELD.
3. REFER TO DETAIL 6 ON SHEET 15 FOR PIPE RESTRAINED/WELDED LENGTHS.
4. PROVIDE CATHODIC TEST STATIONS (CTS) FOR STEEL PIPE AND FOR STEEL CASINGS. SEE DETAIL 4 ON SHEET 12.
5. NOT USED.
6. NOT USED.

VERT 0 2 4 6 1"=4'
HORIZ 0 20 40 60 1"=40'

PROFILE

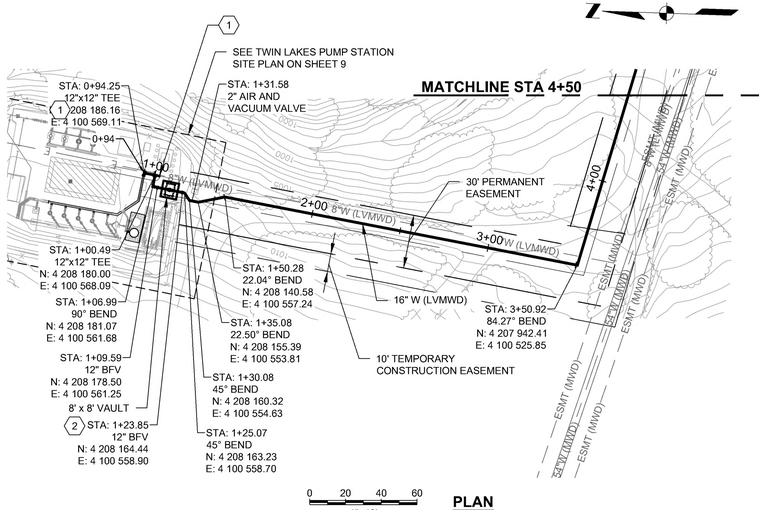

0 20 40 60 1"=40'

PLAN

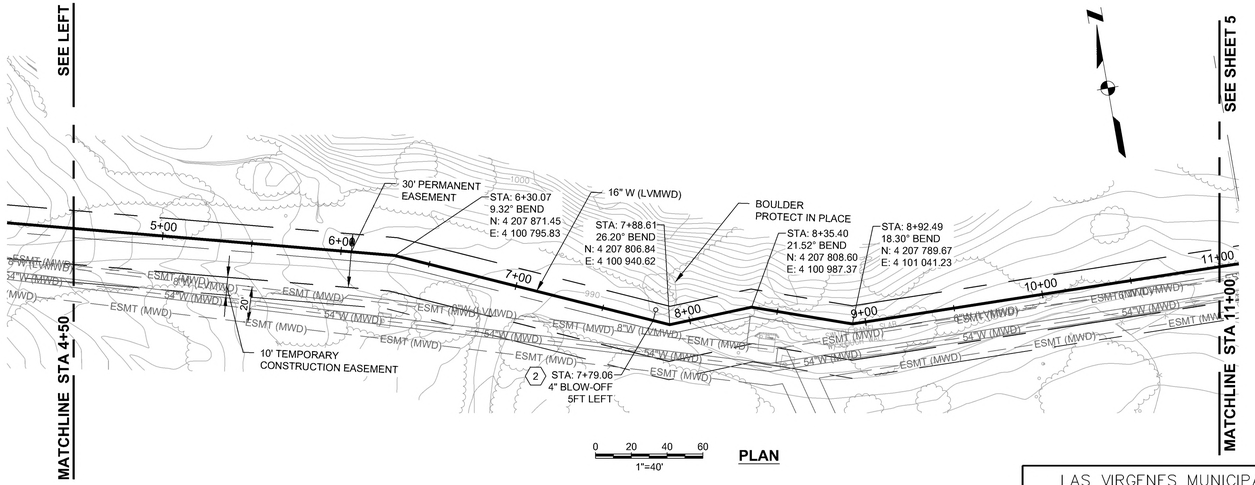

0 20 40 60 1"=40'

PLAN

100% NOT FOR CONSTRUCTION

REV. NO.	DATE	DESCRIPTION	APPVD.	DATE

REVISIONS

DESIGN: RN
DRAWN: EA
CHECKED: MW

ENGINEER'S SEAL

LAS VIRGENES MUNICIPAL WATER DISTRICT

TWIN LAKES PUMP STATION PIPELINE

PIPELINE PLAN AND PROFILE
STA 0+93 TO STA 11+00

PREPARED BY:
LVMWD ENGINEERING
4232 LAS VIRGENES ROAD
CALABASAS, CALIFORNIA 91302

APPROVED FOR LAS VIRGENES MUNICIPAL WATER DISTRICT
BY: _____
PRINCIPAL ENGINEER
R.C.E.
DATE: _____

SCALE: HORIZONTAL: 1" = 40'
VERTICAL: 1" = 4'

DATE:

SHEET 4 OF 19

Q:\Ventura\2017\1744213 00_LVMWD_Twin_Lakes_Pipeline\10-EngDesign\10.02-Cntrct-Ref\Dwgs\CAD\1744213.00-SHEET-04.dwg 10/19/2022 2:14 PM ERICK ALMALEL

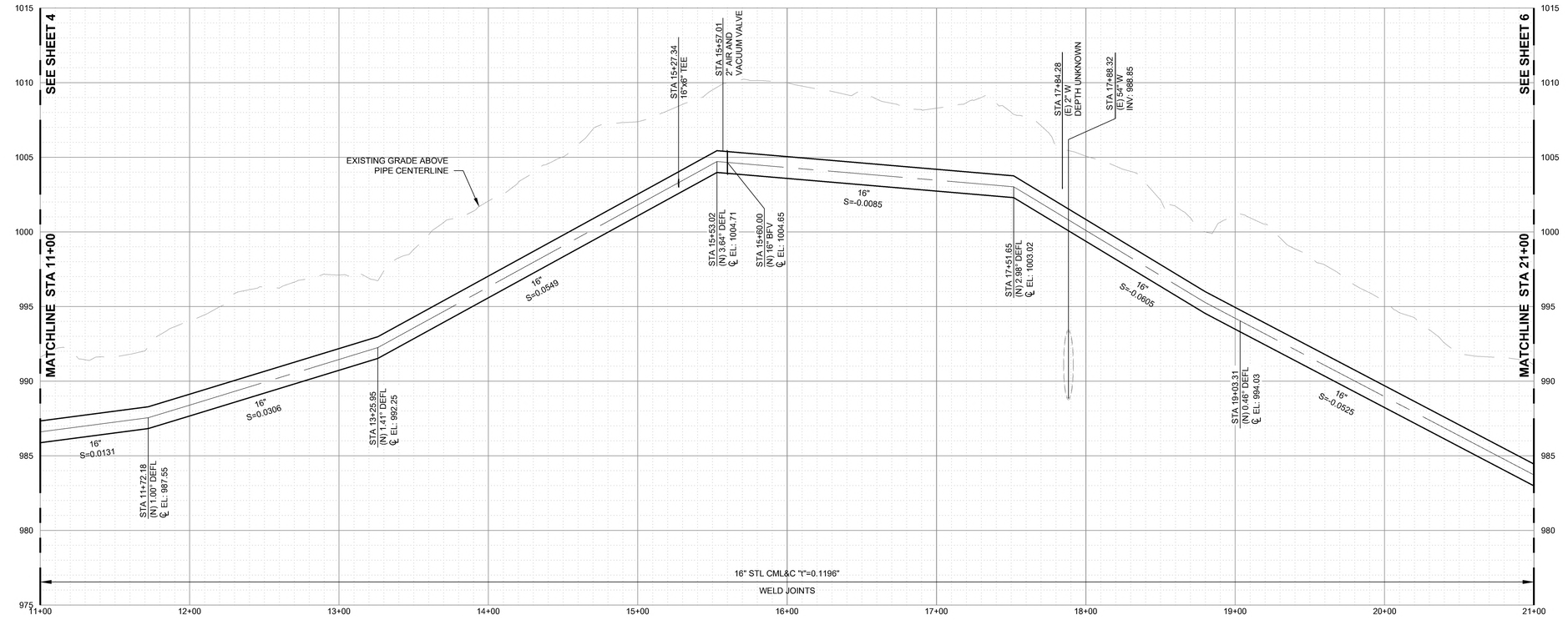

NOTES:

1. NOT USED.
2. LOCATE BLOW-OFF OR AIR VACUUM VALVE PER LVMWD STANDARD DWG PW-128 AND IN ACCORDANCE WITH THE DISTRICT REPRESENTATIVE IN THE FIELD.
3. REFER TO DETAIL 6 ON SHEET 15 FOR PIPE RESTRAINED/WELDED LENGTHS.
4. PROVIDE CATHODIC TEST STATIONS (CTS) FOR STEEL PIPE AND FOR STEEL CASINGS. SEE DETAIL 4 ON SHEET 12.
5. NOT USED.
6. NOT USED.

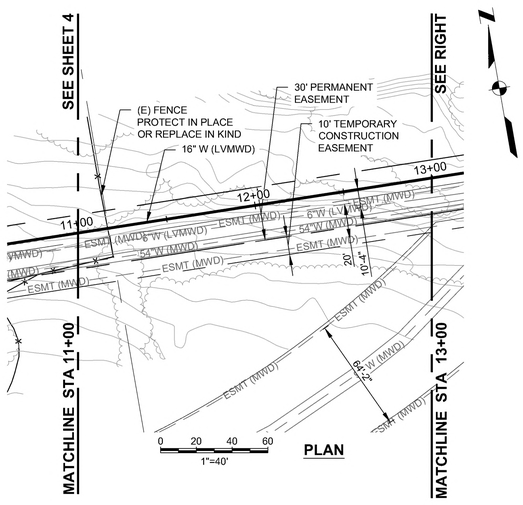

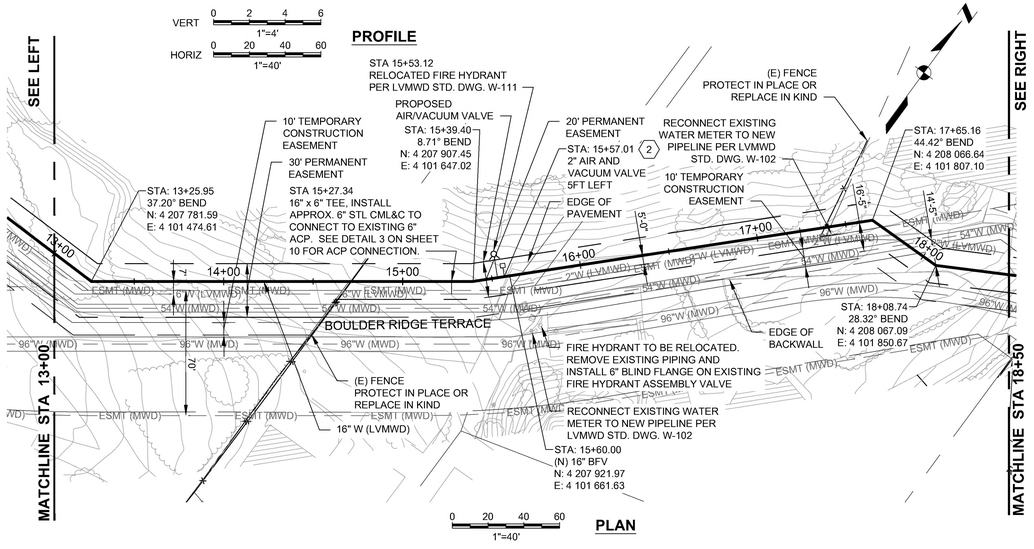

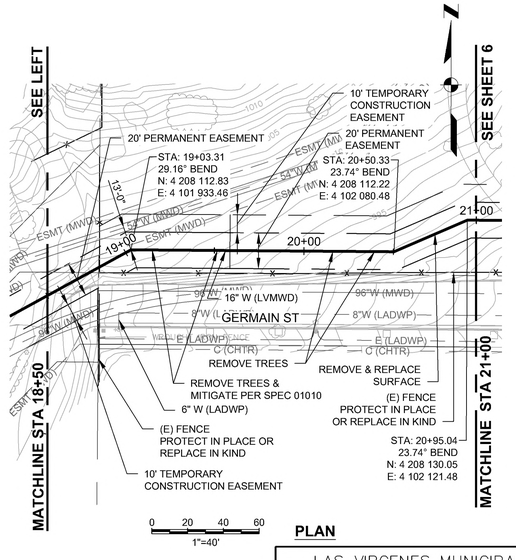

NOTE:

PER CITY OF LOS ANGELES NOTICE OF EXEMPTION, REPLANT EIGHT (8) 24-INCH BOX SIZE COAST LIVE OAK (QUERCUS AGRIFOLIA) TREES TO MITIGATE FOR TREES REMOVED DURING CONSTRUCTION. REFER TO PROTECTED TREE REPORT PREPARED BY JTL CONSULTANTS DATED JULY 31, 2019 FOR LOCATIONS OF TREES TO BE REMOVED. CONFIRM LOCATION OF NEW TREES WITH CITY OF LOS ANGELES RECREATION AND PARKS DEPARTMENT.

100% NOT FOR CONSTRUCTION

DESIGN:	RN
DRAWN:	EA
CHECKED:	MW

ENGINEER'S SEAL

REV. NO.	DATE	DESCRIPTION	APPVD.	DATE

REVISIONS

LAS VIRGENES MUNICIPAL WATER DISTRICT

TWIN LAKES PUMP STATION PIPELINE

PIPELINE PLAN AND PROFILE
STA 11+00 TO STA 21+00

PREPARED BY:

LVMWD ENGINEERING
4232 LAS VIRGENES ROAD
CALABASAS, CALIFORNIA 91302

APPROVED FOR LAS VIRGENES MUNICIPAL WATER DISTRICT

BY: _____

PRINCIPAL ENGINEER
R.C.E.

DATE: _____

SCALE: HORIZONTAL: 1" = 40'
VERTICAL: 1" = 4'

DATE:

SHEET 5 OF 19

Q:\Ventura\2017\1744213 00_LVMWD_Twin_Lakes_Pipeline\10-EngDesign\10.02-Cntrct-RefDwgs\CAD\1744213.00-SHEET-05.dwg ERICK ALMALEL 10/19/2022 2:16 PM

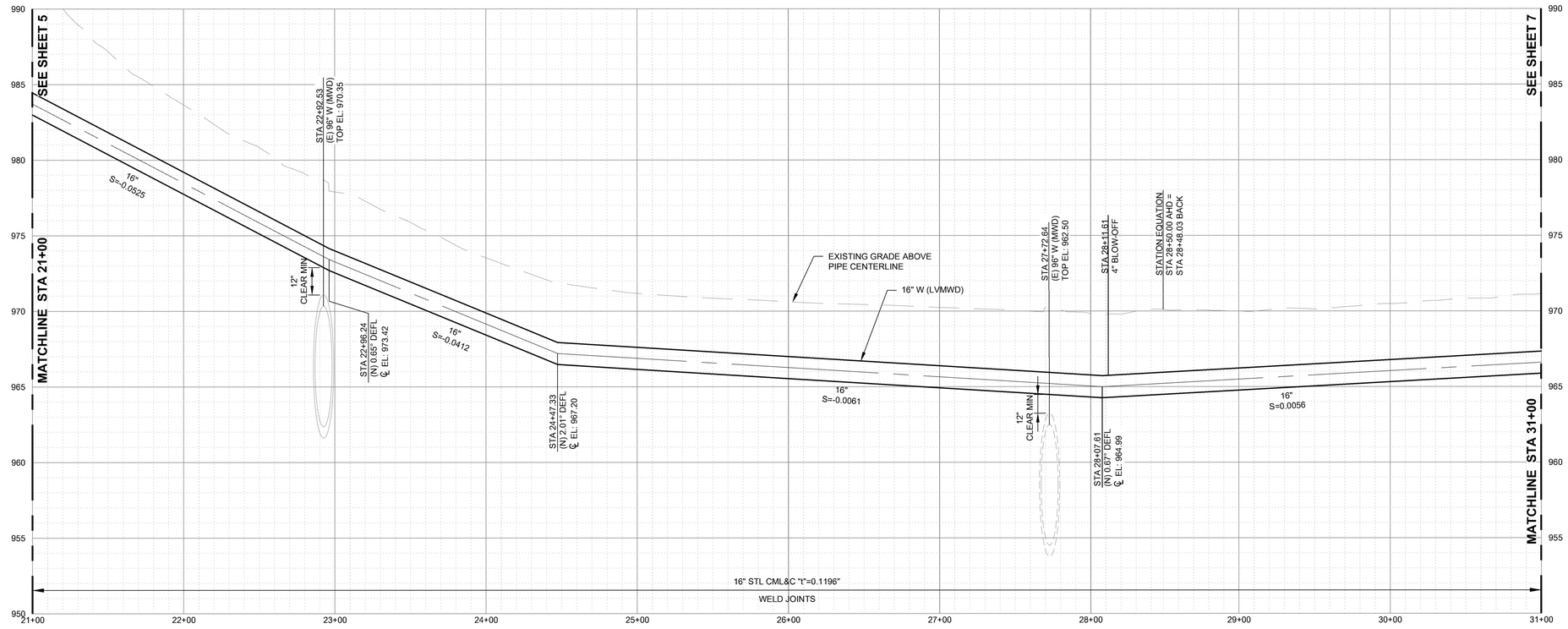

VERT 0 2 4 6 (1"=4')
HORIZ 0 20 40 60 (1"=40')

PROFILE

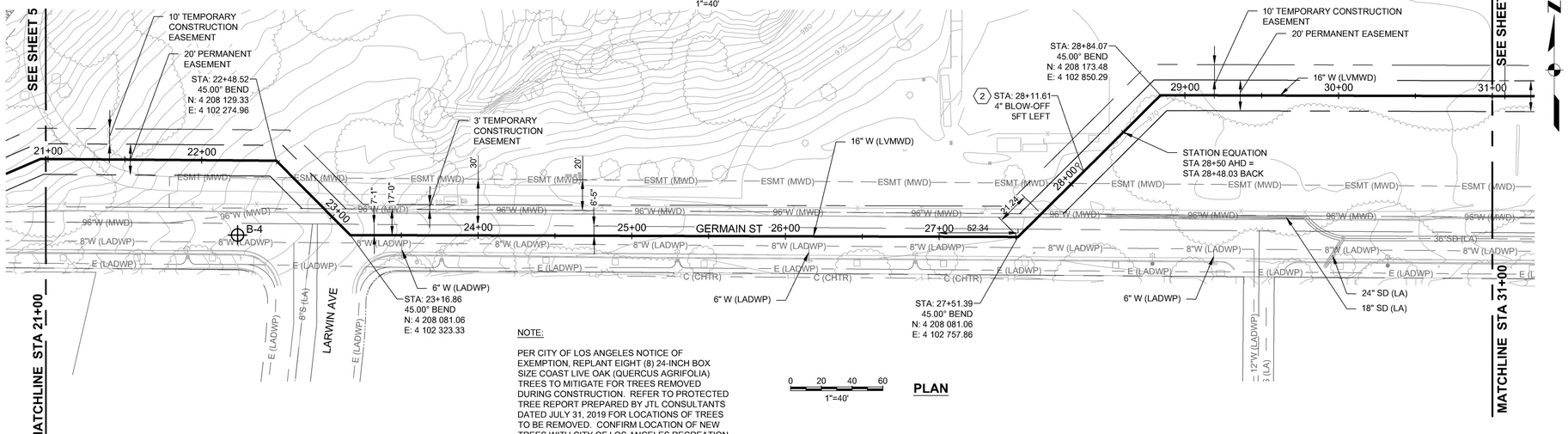

0 20 40 60 (1"=40')

PLAN

NOTE:

PER CITY OF LOS ANGELES NOTICE OF EXEMPTION, REPLANT EIGHT (8) 24-INCH BOX SIZE COAST LIVE OAK (QUERCUS AGRIFOLIA) TREES TO MITIGATE FOR TREES REMOVED DURING CONSTRUCTION. REFER TO PROTECTED TREE REPORT PREPARED BY JTL CONSULTANTS DATED JULY 31, 2019 FOR LOCATIONS OF TREES TO BE REMOVED. CONFIRM LOCATION OF NEW TREES WITH CITY OF LOS ANGELES RECREATION AND PARKS DEPARTMENT.

NOTES:

1. NOT USED.
2. LOCATE BLOW-OFF OR AIR VACUUM VALVE PER LVMWD STANDARD DWG PW-128 AND IN ACCORDANCE WITH THE DISTRICT REPRESENTATIVE IN THE FIELD.
3. REFER TO DETAIL 6 ON SHEET 15 FOR PIPE RESTRAINED/WELDED LENGTHS.
4. PROVIDE CATHODIC TEST STATIONS (CTS) FOR STEEL PIPE AND FORSTEEL CASINGS. SEE DETAIL 4 ON SHEET 12.
5. NOT USED.
6. NOT USED.

100% NOT FOR CONSTRUCTION

DESIGN:	RN
DRAWN:	EA
CHECKED:	MW

ENGINEER'S SEAL

REV. NO.	DATE	DESCRIPTION	APPVD.	DATE

REVISIONS

LAS VIRGENES MUNICIPAL WATER DISTRICT

TWIN LAKES PUMP STATION PIPELINE

PIPELINE PLAN AND PROFILE
STA 21+00 TO STA 31+00

PREPARED BY:

LVMWD ENGINEERING
4232 LAS VIRGENES ROAD
CALABASAS, CALIFORNIA 91302

APPROVED FOR LAS VIRGENES MUNICIPAL WATER DISTRICT

BY: _____
PRINCIPAL ENGINEER
R.C.E.

DATE: _____

SCALE: HORIZONTAL: 1" = 40'
VERTICAL: 1" = 4'

DATE:

SHEET 6 OF 19

Q:\Ventura\2017\1744213 00_LVMWD_Twin_Lakes_Pipeline\10-EngDesign\10.02-Cntrct-RefDwgs\CAD\1744213.00-SHEET-06.dwg ERICK ALMALEL 10/19/2022 2:17 PM

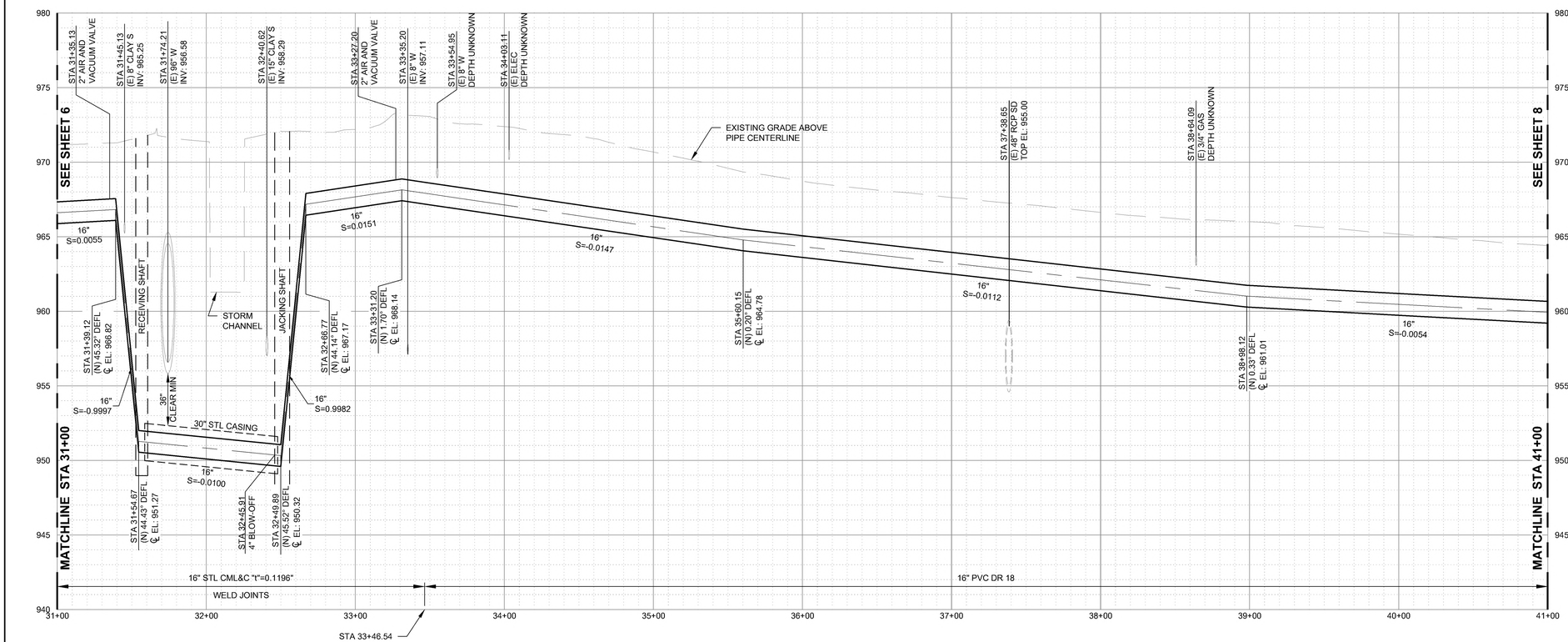

VERT 0 2 4 6 (1"=4')
HORIZ 0 20 40 60 (1"=40')

PROFILE

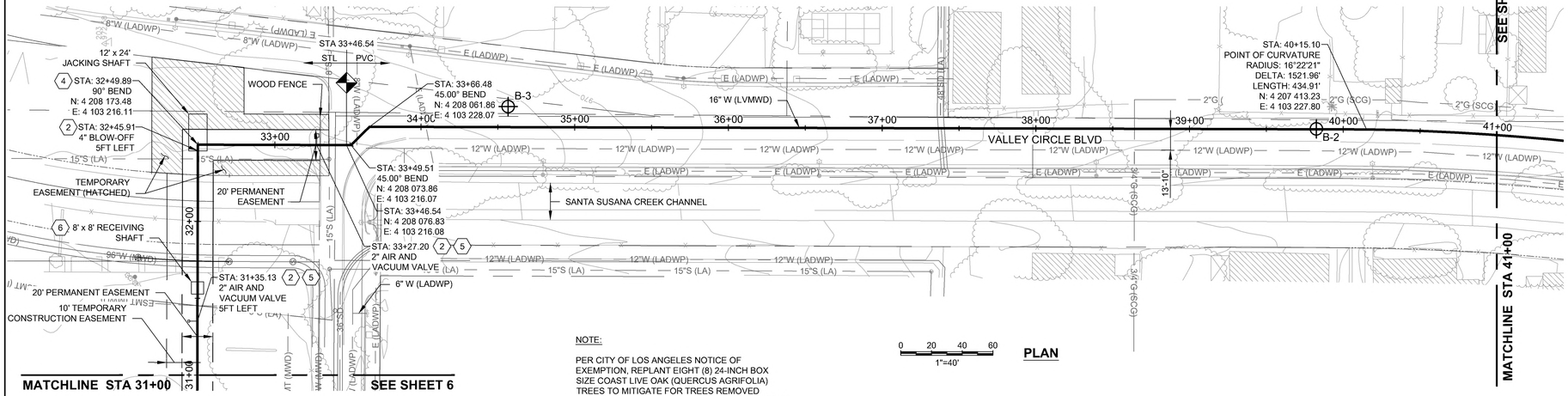

0 20 40 60 (1"=40')

PLAN

NOTE:

PER CITY OF LOS ANGELES NOTICE OF EXEMPTION, REPLANT EIGHT (8) 24-INCH BOX SIZE COAST LIVE OAK (QUERCUS AGRIFOLIA) TREES TO MITIGATE FOR TREES REMOVED DURING CONSTRUCTION. REFER TO PROTECTED TREE REPORT PREPARED BY JTL CONSULTANTS DATED JULY 31, 2019 FOR LOCATIONS OF TREES TO BE REMOVED. CONFIRM LOCATION OF NEW TREES WITH CITY OF LOS ANGELES RECREATION AND PARKS DEPARTMENT.

NOTES:

1. NOT USED.
2. LOCATE BLOW-OFF OR AIR VACUUM VALVE PER LVMWD STANDARD DWG PW-127 AND PW-128 AND IN ACCORDANCE WITH THE DISTRICT REPRESENTATIVE IN THE FIELD.
3. REFER TO DETAIL 6 ON SHEET 15 FOR PIPE RESTRAINED/WELDED LENGTHS.
4. PROVIDE CATHODIC TEST STATIONS (CTS) FOR STEEL PIPE AND FORSTEEL CASINGS. SEE DETAIL 4 ON SHEET 12.
5. PROVIDE BOLLARD PER DETAIL ON SHEET CD-01. PLACEMENT PER LVMWD STANDARD DWG PW-130 AND IN ACCORDANCE WITH THE DISTRICT REPRESENTATIVE IN THE FIELD.
6. SHORE, BRACE, AND PLATE RECEIVING PIT WHEN WORK IS NOT BEING CONDUCTED AT THE SHAFT. PLATES SHALL BE NON-SKID.

100% NOT FOR CONSTRUCTION

DESIGN:	RN
DRAWN:	EA
CHECKED:	MW

ENGINEER'S SEAL

REV. NO.	DATE	DESCRIPTION	APPVD.	DATE

REVISIONS

LAS VIRGENES MUNICIPAL WATER DISTRICT

TWIN LAKES PUMP STATION PIPELINE

PIPELINE PLAN AND PROFILE
STA 31+00 TO STA 41+00

PREPARED BY:
LVMWD ENGINEERING
4232 LAS VIRGENES ROAD
CALABASAS, CALIFORNIA 91302

APPROVED FOR LAS VIRGENES MUNICIPAL WATER DISTRICT
BY: _____
PRINCIPAL ENGINEER
R.C.E.
DATE: _____

SCALE: HORIZONTAL: 1" = 40'
VERTICAL: 1" = 4'

DATE:

SHEET 7 OF 19

Q:\Ventura\2017\17442\13 00_LVMWD_Twin_Lakes_Pipeline\10-EngDesign\10.02-Contct-RefDwgs\CAD\17442\13.00-SHEET-07.dwg 10/19/2022 2:18 PM ERICK ALMALEL

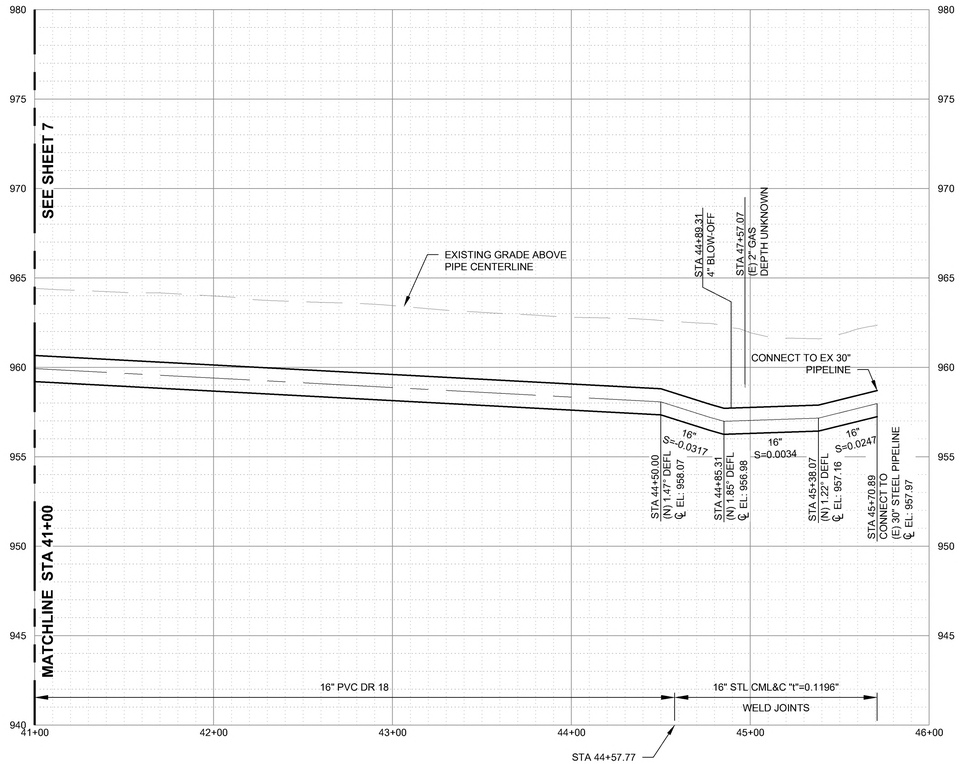

VERT 0 2 4 6 1"=4'
HORIZ 0 20 40 60 1"=40'

PROFILE

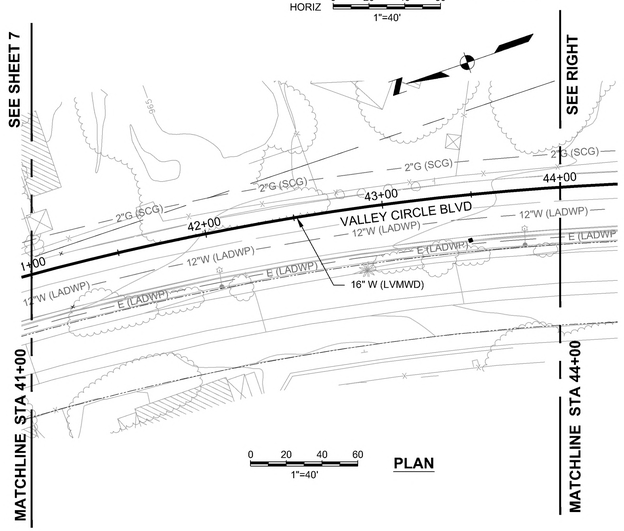

0 20 40 60 1"=40'

PLAN

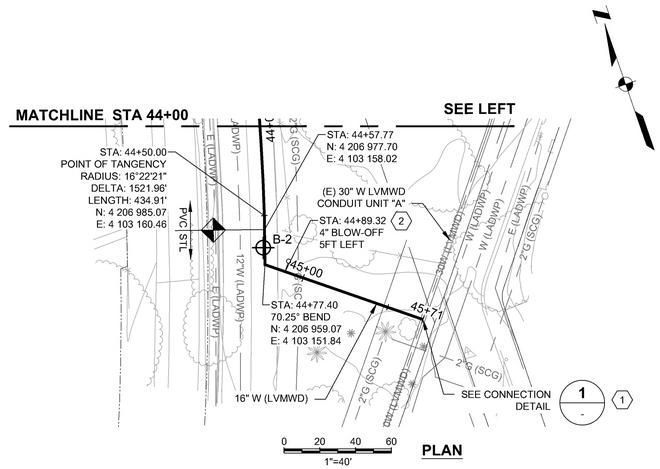

0 20 40 60 1"=40'

PLAN

NOTES:

1. CONTRACTOR TO POTHOLE CONNECTION TO VERIFY LOCATION, ELEVATION, AND SIZE.
2. LOCATE BLOW-OFF OR AIR VACUUM VALVE PER LVMWD STANDARD DWG PW-128 AND IN ACCORDANCE WITH THE DISTRICT REPRESENTATIVE IN THE FIELD.
3. NOT USED.
4. NOT USED.
5. NOT USED.
6. NOT USED.

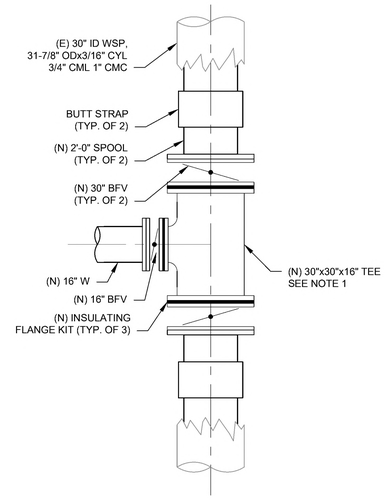

CONSTRUCTION NOTES:

1. OUTLET REINFORCEMENT IN ACCORDANCE WITH AWWA M11. USE A DESIGN PRESSURE OF 150 PSI.
2. LOCATE ALL JOINTS ON THE 30-INCH CONDUIT WITHIN 140 FEET OF EACH NEW BFV. FROM THE INTERIOR OF THE PIPE, REMOVE THE MORTAR LINING AND FULLY WELD THE JOINT. PERFORM A DYE PENETRANT TEST OF ALL WELDS AND INSTALL NEW MORTAR LINING UPON APPROVAL OF THE TEST

CONDUIT UNIT "A" CONNECTION POINT 1

SCALE: NTS

100% NOT FOR CONSTRUCTION

DESIGN:	RN
DRAWN:	EA
CHECKED:	MW

ENGINEER'S SEAL

REV. NO.	DATE	DESCRIPTION	APPVD.	DATE

REVISIONS

LAS VIRGENES MUNICIPAL WATER DISTRICT

TWIN LAKES PUMP STATION PIPELINE

PIPELINE PLAN AND PROFILE
STA 41+00 TO STA 45+71

PREPARED BY:
LVMWD ENGINEERING
4232 LAS VIRGENES ROAD
CALABASAS, CALIFORNIA 91302

APPROVED FOR LAS VIRGENES MUNICIPAL WATER DISTRICT
BY: _____
PRINCIPAL ENGINEER
R.C.E.
DATE: _____

SCALE: HORIZONTAL: 1" = 40'
VERTICAL: 1" = 4'

DATE:

SHEET 8 OF 19

Q:\Ventura\2017\1744213 00_LVMWD_Twin_Lakes_Pipeline\10-EngDesign\10.02-Cntrct-RefDwgs\CAD\1744213.00-SHEET-08.dwg ERICK ALMALEL 10/19/2022 2:19 PM

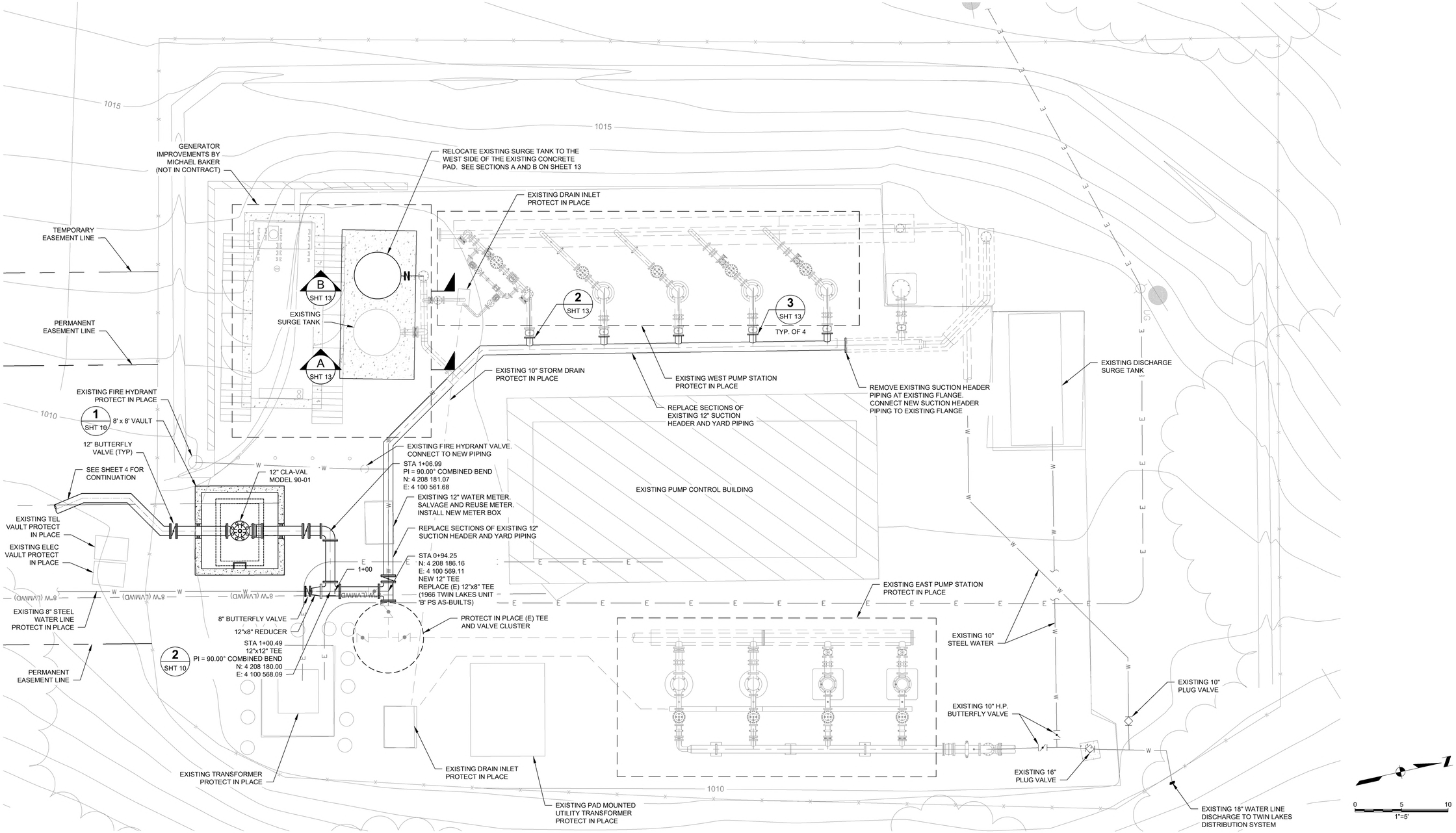

100% NOT FOR CONSTRUCTION

DESIGN:	XX
DRAWN:	XX
CHECKED:	XX

ENGINEER'S SEAL

REV. NO.	DATE	DESCRIPTION	APPVD.	DATE

REVISIONS

LAS VIRGENES MUNICIPAL WATER DISTRICT

TWIN LAKES PUMP STATION PIPELINE

PIPELINE, VALVE, AND SURGE TANK MODIFICATIONS SITE PLAN

PREPARED BY:

LVMWD ENGINEERING
4232 LAS VIRGENES ROAD
CALABASAS, CALIFORNIA 91302

APPROVED FOR LAS VIRGENES MUNICIPAL WATER DISTRICT

BY: _____

PRINCIPAL ENGINEER
R.C.E.

DATE: _____

SCALE: HORIZONTAL: 1" = 5'

DATE:

SHEET 9 OF 19

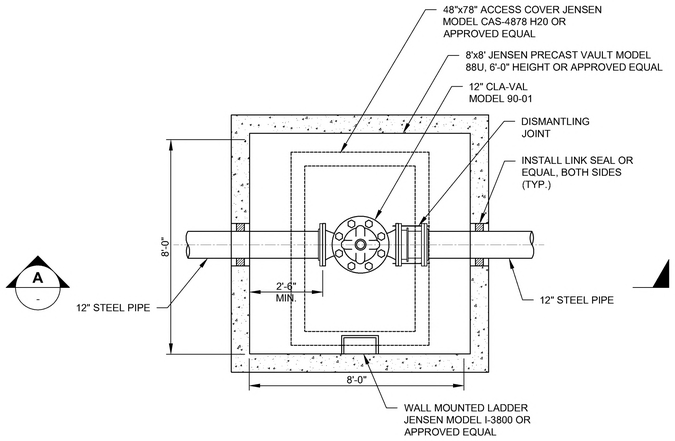

VAULT PLAN 1
SCALE: 3/8"=1'-0"
SHT 9

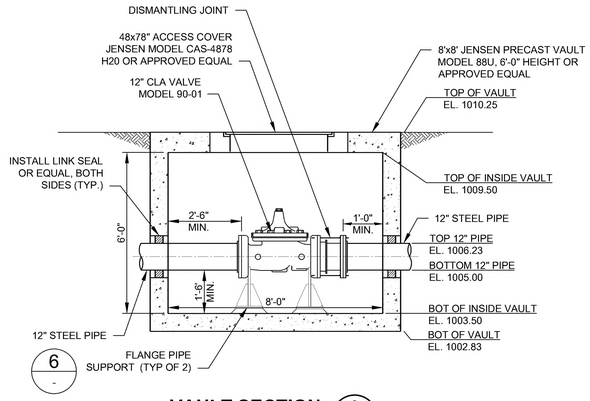

VAULT SECTION A
SCALE: 3/8"=1'-0"

NOTE:

1. THE CONTRACTOR SHALL TEST AND DISINFECT THE NEW PIPELINE PRIOR TO MAKING CONNECTIONS TO THE EXISTING PIPELINES.

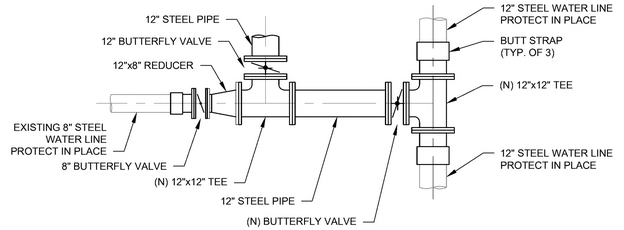

CONSTRUCTION NOTES:

1. REMOVE EXISTING BLIND FLANGE AT POC AND RETURN TO LVMWD.
2. INSTALL INSULATING FLANGE KIT BETWEEN EXISTING AND NEW PIPES.

PUMP STATION CONNECTION DETAIL 2
SCALE: NTS
SHT 4

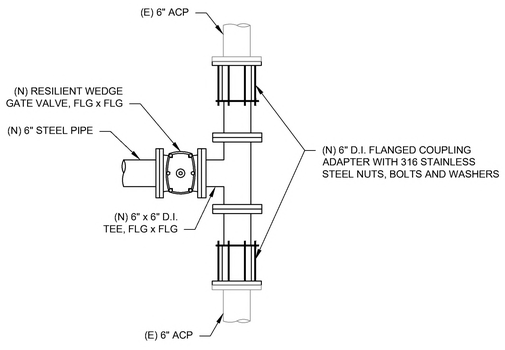

NOTES:

1. CUT ANY MACHINE END-OFF ACP TO EXISTING ROUGH BARREL.
2. WRAP ALL METALLIC PARTS WITH 8 MIL POLYETHYLENE ENCASEMENT - REFER TO LVMWD STANDARD SPEC. SECTION 1.3.

CUT-IN TEE FOR CONNECTION TO EXISTING 6" ACP 3
SCALE: NTS

100% NOT FOR CONSTRUCTION

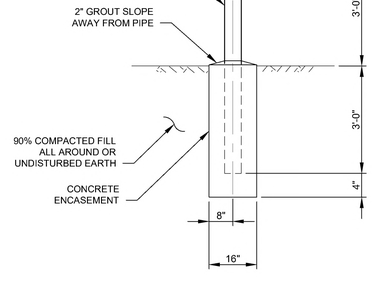

NOTE:

1. STEEL PIPE SHALL BE SEAMLESS, CONFORMING TO TO ASTM A53, GRADE A.
2. HOT DIP GALVANIZED PIPE IN ACCORDANCE WITH ASTM A525, G-90 COMMERCIAL.

TYPICAL BOLLARD DETAIL 4
SCALE: NONE

RESTRAINED JOINT TABLE	
PVC PIPE	
BEGIN STA	END STA
33+46.54	33+87.48

NOTE:

PROVIDE A LAY LIST SHOWING THE PIPE LENGTHS, STATIONS OF EACH JOINT, AND THE JOINTS THAT WILL BE RESTRAINED FOR REVIEW BY THE ENGINEER.

RESTRAINED LENGTHS 5
SCALE: NONE

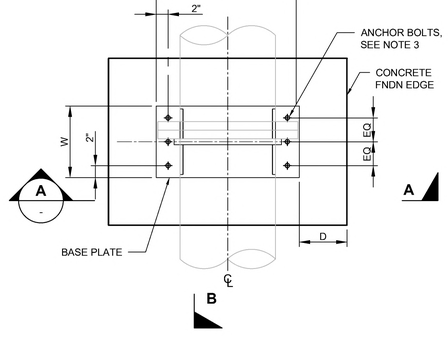

PLAN

NOTES:

1. POST-INSTALLED ANCHORS SHALL USE HILTI HIT-HY 200 EPOXY ADHESIVE OR APPROVED EQUAL.
2. BASE PLATE SHALL HAVE 1/8" ROUNDED CORNERS.
3. REFER TO TABLE FOR THE NUMBER OF REQUIRED ANCHOR BOLTS BASED ON PIPE DIAMETER. ANCHORS SHALL BE EQUALLY SPACED IN (2) ROWS AND HAVE EDGE DISTANCES AS NOTED IN PLAN VIEW.
4. CONCRETE SHALL HAVE A MINIMUM STRENGTH OF 3,000 PSI.

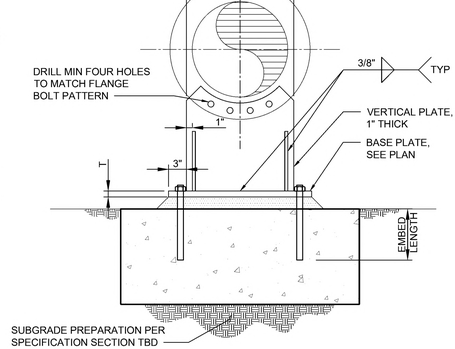

SECTION A-A

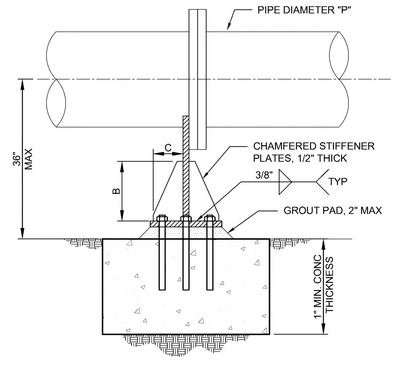

SECTION B-B

PIPE DIAMETER	BASE PLATE			VERTICAL PLATE	STIFFENER PLATE		ANCHOR BOLTS PER ROW	CONCRETE EDGE DISTANCE	POST-INSTALLED THREADED ROD (GRADE 55)	
P	W (MIN)	L (MIN)	T	A	B	C	#	D (MIN)	SIZE Ø	EMBED
P ≤ 12"	1'-0"	1'-8"	3/4"	1'-2"	10"	5"	2	1'-2"	7/8"	4"

FLANGE SUPPORTED PIPE 6
SCALE: NONE

REV. NO.	DATE	DESCRIPTION	APPVD.	DATE

REVISIONS

DESIGN: XX
DRAWN: XX
CHECKED: XX

ENGINEER'S SEAL

LAS VIRGENES MUNICIPAL WATER DISTRICT

TWIN LAKES PUMP STATION PIPELINE

MISCELLANEOUS DETAILS I

PREPARED BY:

LVMWD ENGINEERING
4232 LAS VIRGENES ROAD
CALABASAS, CALIFORNIA 91302

APPROVED FOR LAS VIRGENES MUNICIPAL WATER DISTRICT

BY: _____

PRINCIPAL ENGINEER
R.C.E.

DATE: _____

SCALE: HORIZONTAL: 3/8" = 1'

DATE:

SHEET 10 OF 19

Q:\Ventura\2017\1744213 00_LVMWD_Twin_Lakes_Pipeline\10-EngDesign\10.02-Cntrct-Ref\Dwgs\CAD\1744213.00-SHEET-10.dwg 10/19/2022 2:20 PM ERICK ALMALEL

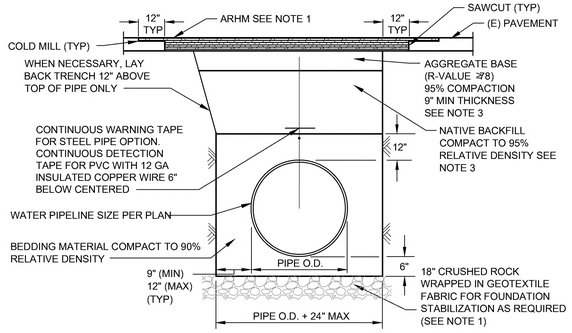

NOTES:

1. NEW PAVING SHALL BE ASPHALT RUBBER HOT MIX (ARHM) AS SPECIFIED IN SECTION 02700. PAVEMENT DEPTH SHALL BE 5" IN LAYERS NOT EXCEEDING 2" IN THICKNESS. SEE POTHOLING REPORT IN SECTION 02302 TO DETERMINE THE THICKNESS OF PAVEMENT TO REMOVE FOR TRENCHING. FINAL PAVING PASS SHALL BE 1-INCH THICK TO MATCH COLD MILL DEPTH.
2. COLD MILL 1 INCH DEEP ALONG BOTH SIDES OF PAVING EDGE NOT LESS THAN 12 INCHES WIDE.
3. AT THE CONTRACTORS OPTION, THE NATIVE BACKFILL AND AGGREGATE BASE MAY BE REPLACED WITH TWO SACK SAND CEMENT SLURRY.

TYPICAL TRENCH SECTION 1
SCALE: NONE

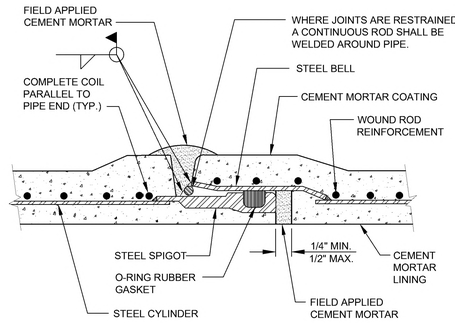

NOTES:

1. JOINT CONFIGURATION FOR ILLUSTRATIVE PURPOSE ONLY. PROVIDE JOINT CONFIGURATION WHICH MEETS AWWA C200.
2. WHERE JOINTS ARE UNRESTRAINED, REFER TO DETAIL 9, SHEET CP-01 FOR BONDING REQUIREMENTS.

CONCRETE MORTAR LINED AND COATED CARBON STEEL PIPE BELL JOINT DETAIL 2
SCALE: NONE

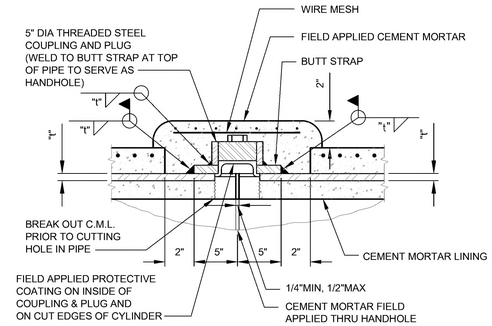

NOTES:

1. BUTT STRAP THICKNESS SHALL BE EQUAL TO THICKNESS OF LARGEST CYLINDER.
2. PROVIDE MANUFACTURER'S DIAPER TO ACCOMPLISH FIELD APPLIED CEMENT MORTAR.

TYPICAL PIPE BUTT STRAP JOINT 3
SCALE: NONE

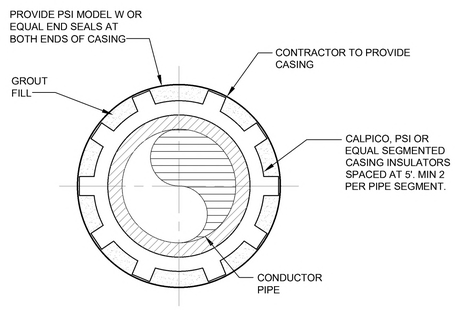

NOTES:

1. FOR CATHODIC PROTECTION TEST STATION, SEE DETAILS 1/SHT 12 and 4/SHT 12
2. PROVIDE 6-INCH CONCRETE BULKHEAD AT EACH END OF CASING, CLASS 450-C-2000 CONCRETE.
3. UNDER NO CIRCUMSTANCES SHALL THE CASING BE CLOSED OR ANY GROUT INSTALLED INSIDE THE CASING UNTIL AFTER THE PRESSURE TEST FOR THE PIPELINE HAS BEEN COMPLETED AND ACCEPTED BY THE ENGINEER.
4. INSTALL A 3" BSP RISER PIPE IN EACH BULKHEAD THAT HAS THE TOP 6" ABOVE THE TOP OF THE CASING. PUMP GROUT INTO THE CASING UNTIL IT FLOWS OUT OF THE OTHER RISER PIPE. UNDER NO CIRCUMSTANCES EXCEED 5 PSI GROUT PRESSURE TO ASSURE THAT THE GROUT PRESSURE WILL NOT COLLAPSE THE CARRIER PIPE.

TYPICAL PIPE CASING DETAIL 4
SCALE: NONE

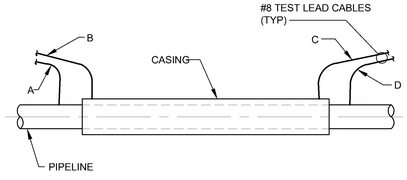

NOTES:

1. TIE LEADS A & B TOGETHER AND LEADS C & D TOGETHER AND LABEL WITH METAL TAGS TO IDENTIFY EACH WIRE EXTEND TO CATHODIC TEST STATION.
2. PROVIDE 2 WIRES FOR EACH LEAD SHOWN.
3. IF PIPELINE IS PVC LEADS A & D ARE NOT REQUIRED.

CABLE CONNECTION AT PIPE CASING 5
SCALE: NONE

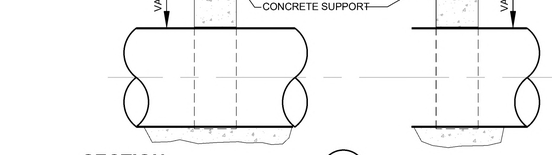

SECTION A
SCALE: NONE

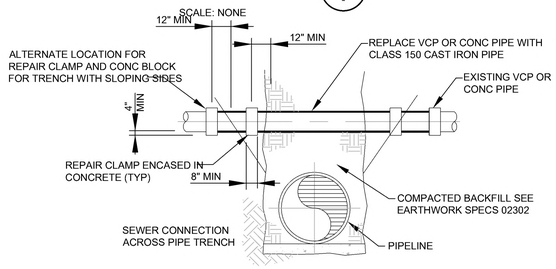

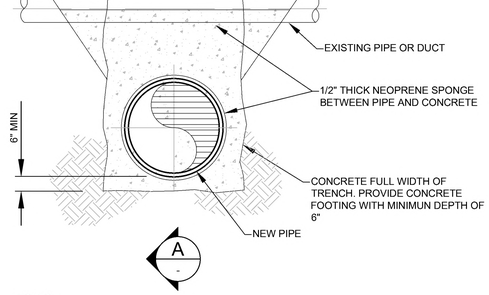

NOTES:

1. UNDERGROUND UTILITY SUPPORTS ARE TO BE PROVIDED WHEN MINIMUM CLEARANCE OF 12 INCHES CANNOT BE PROVIDED.
2. EXISTING PIPE OR DUCT SHALL BE FIRMLY SUPPORTED DURING INSTALLATION OF NEW PIPE AND SUPPORT.
3. BRING BACKFILL UP TO UNIFORMLY ON BOTH SIDES OF CONCRETE SUPPORT

TYPICAL CROSS PIPE SUPPORTS DETAIL 6
SCALE: NONE

100% NOT FOR CONSTRUCTION

DESIGN:	XX
DRAWN:	XX
CHECKED:	XX

ENGINEER'S SEAL

REV. NO.	DATE	DESCRIPTION	APPVD.	DATE

REVISIONS

LAS VIRGENES MUNICIPAL WATER DISTRICT

TWIN LAKES PUMP STATION PIPELINE

MISCELLANEOUS DETAILS II

PREPARED BY:

LVMWD ENGINEERING
4232 LAS VIRGENES ROAD
CALABASAS, CALIFORNIA 91302

APPROVED FOR LAS VIRGENES MUNICIPAL WATER DISTRICT

BY: _____

PRINCIPAL ENGINEER
R.C.E.

DATE: _____

SCALE:

DATE:

SHEET 11 OF 19

10/19/2022 2:21 PM ERICK ALMALEL
Q:\Ventura\20171744213.00_LVMWD_Twin_Lakes_Pipeline\10-EngDesign\10.02-Cntrct-RefDwgs\CAD\1744213.00-SHEET-11.dwg

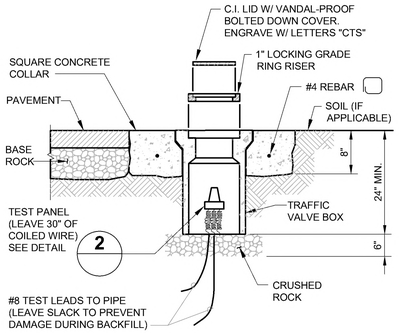

CATHODIC TEST STATION DETAIL 1

SCALE: NONE

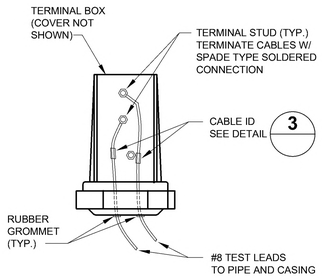

TEST PANEL DETAIL 2

SCALE: NONE

(NUMBER OF TERMINAL STUDS DEPENDS ON NUMBER OF CONDUCTOR CONNECTIONS)

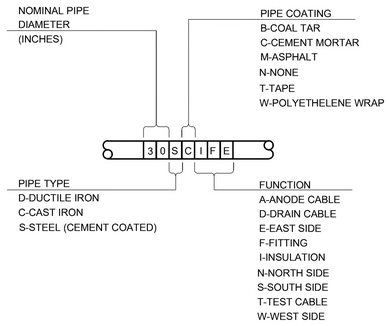

CABLE INDENTIFICATION DETAIL 3

SCALE: NONE

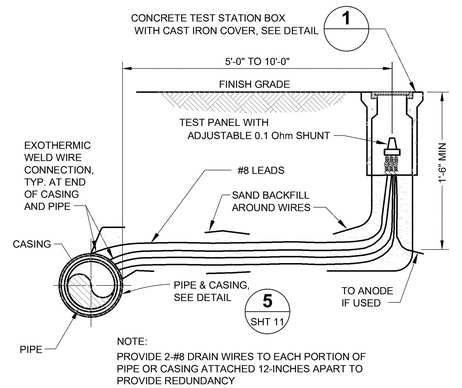

IF A TEST STATION CAN NOT BE INSTALLED AT EACH END OF CASING, PROVIDE DUPLICATE #12 LEADS FROM ONE END OF CASING TO TEST STATION.

CATHODIC TEST STATION (CTS) AT PIPE AND/OR CASING DETAIL 4

SCALE: NONE

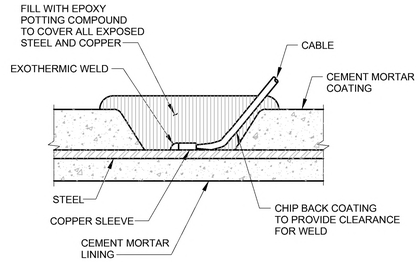

NOTES:
1. TYPICAL OF TWO PER CTS.

CABLE CONNECTIONS TO C.M.C. STEEL PIPE DETAIL 5

SCALE: NONE

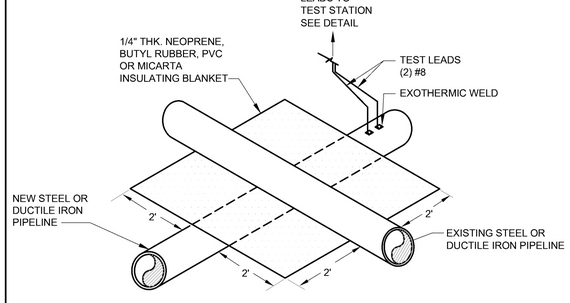

NOTES:
1. NOT REQUIRED FOR PVC OR < 4" PIPELINE CROSSINGS.
2. NEW PIPELINE AND EXISTING PIPELINE SHOWN FOR REFERENCE.
3. BLANKET SHALL BE SQUARE AND 2 FEET LARGER ON EACH SIDE THAN THE LARGEST PIPELINE DIAMETER (eg. 24 PIPE SIZE = 6 FEET SQUARE BLANKET).
4. BLANKET SHALL BE INSTALLED ON SOIL BACKFILL & CENTERED BETWEEN THE PIPES.
5. BLANKET SHALL BE INSTALLED BETWEEN THE NEW PIPELINE AND ALL METALLIC AND EXISTING PIPELINES > 4" DIAMETER.

INSULATING BLANKET AT PIPELINE CROSSING 6

SCALE: NONE

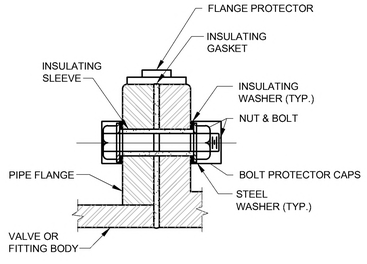

NOTE: PIPE COATING NOT SHOWN.

INSULATING FLANGE DETAIL 7

SCALE: NONE

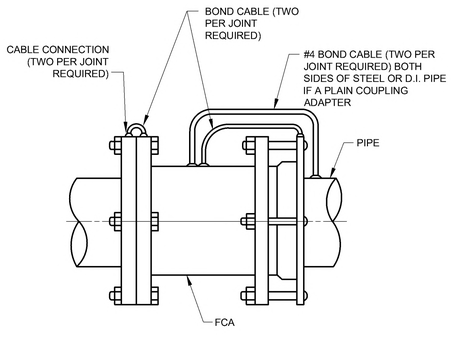

FLANGED OR PLAIN COUPLING ADAPTER BONDING DETAIL 8

SCALE: NONE

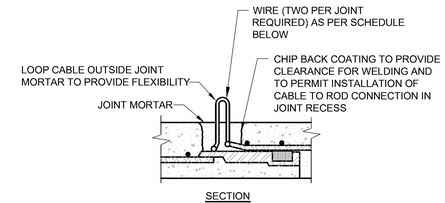

SECTION

BONDING WIRE SIZE REQUIRED	
PIPE SIZE	WIRE SIZE
12"	#4
16"	#2
18"	#1
30"	#3/0

C.M.C. STEEL PIPE JOINT BONDING DETAIL 9

SCALE: NONE

NOTES:

1. THIS DRAWING TO BE COORDINATED WITH EQUIPMENT MANUFACTURER'S AND SUPPLIER'S DRAWINGS.
2. CATHODIC TEST STATIONS TO BE LOCATED AT END OF PIPELINES AND CASINGS AND NOT MORE THAN 1,000 FEET INTERVALS ALONG LENGTH AT LOCATIONS SHOWN ON DRAWINGS OR AS APPROVED BY THE ENGINEER.
3. ALL PIPE JOINTS SHALL BE BONDED FOR POSSIBLE FUTURE INSTALLATION OF CATHODIC PROTECTION.
4. COAT ALL METAL VALVE FLANGES AND APPURTENANCES WITH PETROLEUM TAPE AS PER SPECIFICATIONS.

100% NOT FOR CONSTRUCTION

DESIGN:	XX
DRAWN:	XX
CHECKED:	XX

ENGINEER'S SEAL

REV. NO.	DATE	DESCRIPTION	APPVD.	DATE

REVISIONS

LAS VIRGENES MUNICIPAL WATER DISTRICT

TWIN LAKES PUMP STATION PIPELINE

CATHODIC PROTECTION DETAILS

PREPARED BY:

LVMWD ENGINEERING
4232 LAS VIRGENES ROAD
CALABASAS, CALIFORNIA 91302

APPROVED FOR LAS VIRGENES MUNICIPAL WATER DISTRICT

BY: _____

PRINCIPAL ENGINEER
R.C.E.

DATE: _____

SCALE:

DATE:

SHEET 12 OF 19

ERICK ALMALEL 10/19/2022 2:21 PM
Q:\Ventura\2017\1744213.00_LVMWD_Twin_Lakes_Pipeline\10-Eng\Design\10.02-Cntrct-Ref\Dwgs\CAD\1744213.00-SHEET-12.dwg

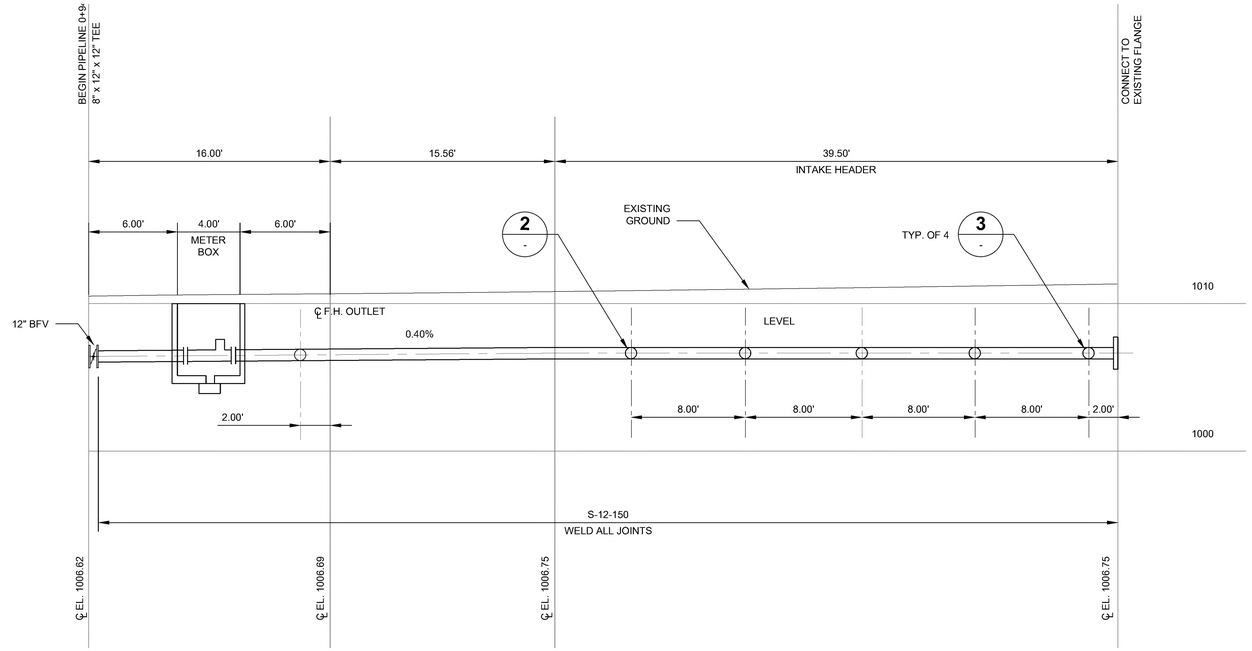

INTAKE HEADER AND PIPING 1 -

SCALE: 1"=5'-0"

NOTES:

1. CONTRACTOR SHALL FIELD VERIFY ALL EXISTING CONDITIONS PRIOR TO THE START OF CONSTRUCTION AND SHALL PROVIDE THE ENGINEER WITH THE EXISTING DIMENSIONS PRIOR TO SUBMITTAL OF SHOP DRAWINGS.
2. CONTRACTOR SHALL COORDINATE ALL TIE-IN WORK AND SHUTDOWNS WITH THE DISTRICT.
3. ALL EXPOSED PIPING/FITTINGS SHALL BE CML & EPOXY COATED STEEL SCHEDULE 40. ALL BELOW GROUND PIPING/FITTINGS SHALL BE CML&C STEEL SCHEDULE 40.
4. CONTRACTOR SHALL REPAIR ALL MORTAR LINING AND COATING ON EXISTING STEEL PIPING AND FITTINGS DAMAGED DURING CONSTRUCTION.

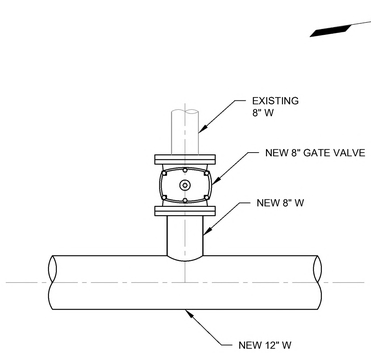

ARV CONNECTION DETAIL 2 -

SCALE: 3/4"=1'-0"

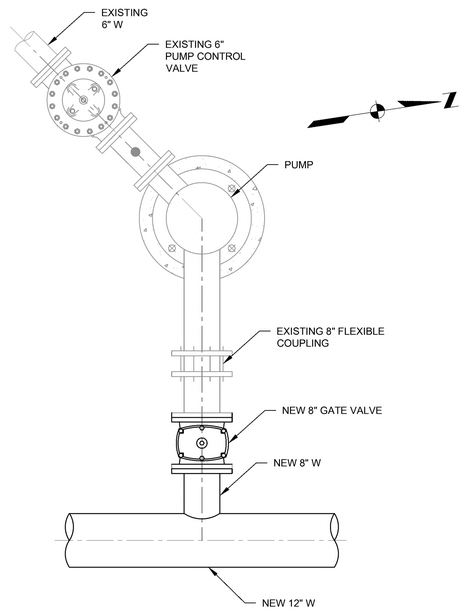

PUMP CONNECTION DETAIL 3 -

SCALE: 3/4"=1'-0"

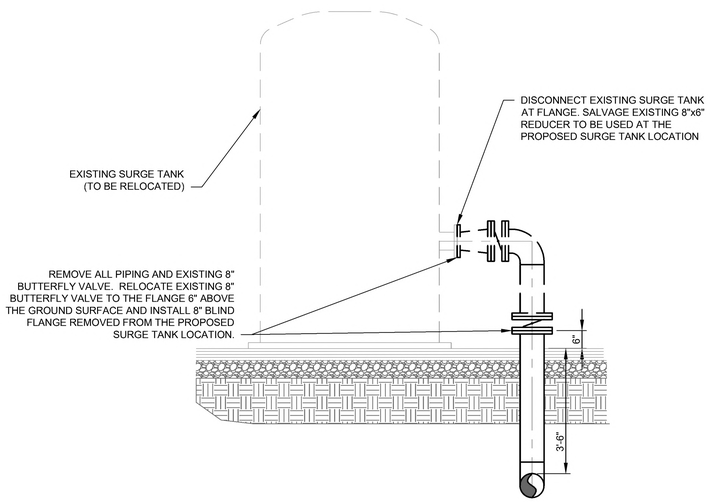

SURGE TANK SECTION - EXISTING LOCATION A SHT 9

SCALE: 1/2"=1'-0"

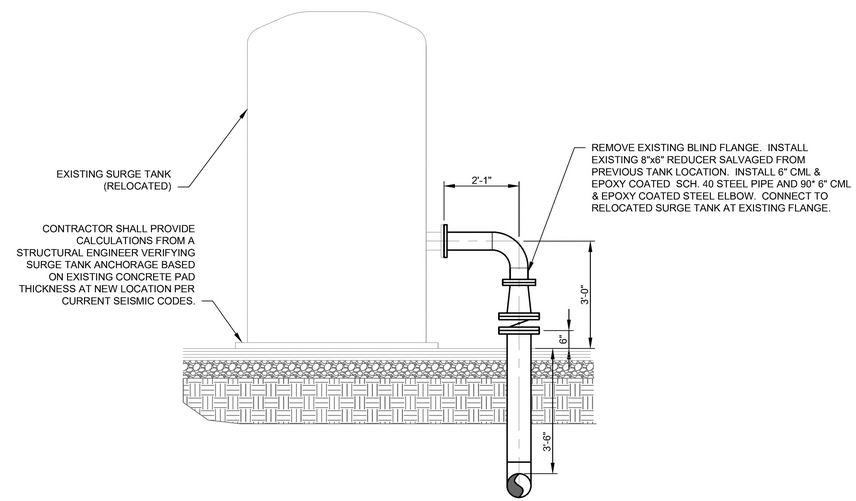

SURGE TANK SECTION - PROPOSED LOCATION B SHT 9

SCALE: 1/2"=1'-0"

100% NOT FOR CONSTRUCTION

DESIGN:	XX
DRAWN:	XX
CHECKED:	XX

ENGINEER'S SEAL

REV. NO.	DATE	DESCRIPTION	APPVD.	DATE

REVISIONS

LAS VIRGENES MUNICIPAL WATER DISTRICT

TWIN LAKES PUMP STATION PIPELINE

MISCELLANEOUS DETAILS III

PREPARED BY:

LVMWD ENGINEERING
4232 LAS VIRGENES ROAD
CALABASAS, CALIFORNIA 91302

APPROVED FOR LAS VIRGENES MUNICIPAL WATER DISTRICT

BY: _____

PRINCIPAL ENGINEER
R.C.E.

DATE: _____

SCALE: AS SHOWN

DATE:

SHEET 13 OF 19

ERICK ALMALEL 10/19/2022 2:21 PM

Q:\Ventura\2017\17442130 0_LVMWD_Twin_Lakes_Pipeline\10-EngDesign\10.02-Cntrct-RefDwgs\CAD\17442130 0-SHEET-13.dwg

ABBREVIATIONS

a	CIRCUIT BREAKER AUX. CONTACT, CLOSED WHEN BREAKER IS CLOSED
A	AMMETER, AMPERES
AC	ALTERNATING CURRENT
A/D	ANALOG TO DIGITAL
ADJ	ADJUSTABLE
AF	AMPERE FRAME
AFF	ABOVE FINISHED FLOOR
AIC	AMPERES INTERRUPTING CAPACITY
AL	ALUMINUM
ALT	ALTERNATOR
A/M	AUTO/MANUAL CONTROLLER
ANN	ANNUNCIATOR
APPROX	APPROXIMATE
AS	AMMETER SWITCH
ASD	ADJUSTABLE SPEED DRIVE (DC)
AT	AMMETER TRIP
ATS	AUTOMATIC TRANSFER SWITCH
AUTO	AUTOMATIC
AUX	AUXILIARY
AWG	AMERICAN WIRE GAGE
b	CIRCUIT BREAKER AUX. CONTACT, CLOSED WHEN BREAKER IS OPEN
BCG	BARE COPPER GROUND
BLDG	BUILDING
C	CONDUIT, CONTACTOR
CAB	CABINET
CAP	CAPACITOR
CB	CIRCUIT BREAKER
CC	CONTROL CABLE, CLOSING COIL
CHH	COMMUNICATION HANDHOLE
CL	CHLORINE
CKT	CIRCUIT
CMH	COMMUNICATION MANHOLE
CO	CONDUIT ONLY
COMM	COMMUNICATION
COND	CONDUCTOR
CONT	CONTINUED, CONTINUATION
CPT	CONTROL POWER TRANSFORMER
CP	CONTROL PANEL
CR	CONTROL RELAY
CS	CONTROL SWITCH
CT	CURRENT TRANSFORMER
CWP	COLD WATER PIPE
DC	DIRECT CURRENT
DIA	DIAMETER
DIAG	DIAGRAM
DISC	DISCONNECT
DISTR	DISTRIBUTION
DN	DOWN
DP	DISTRIBUTION PANEL
DPDT	DOUBLE POLE, DOUBLE THROW
DPST	DOUBLE POLE, SINGLE THROW
DWG	DRAWING
(E)	EXISTING
EA	EACH
EF	EXHAUST FAN
EHH	ELECTRICAL HANDHOLE
EL, ELEV	ELEVATION
ELEC	ELECTRIC, ELECTRICAL
ELEM	ELEMENTARY
EMERG	EMERGENCY
ENCL	ENCLOSURE
EFFL	EFFLUENT
EQ	EQUAL
EQPT	EQUIPMENT
ETM	ELAPSED TIME METER
FACP	FIRE ALARM CONTROL PANEL
FDR	FEEDER
FF	FINISHED FLOOR
FLEX	FLEXIBLE
FLUOR	FLUORESCENT
FO	FIBER OPTIC
FREQ	FREQUENCY
FT	FEET, FOOT
FU	FUSE
(F)	FUTURE
FVNR	FULL VOLTAGE, NON REVERSING
FVR	FULL VOLTAGE, REVERSING
FWD	FORWARD
GA	GAUGE
GALV	GALVANIZED
GEN	GENERATOR
GFI	GROUND FAULT INTERRUPTER
GND	GROUND
GRS	GALVANIZED RIGID STEEL
H_2O_2	HYDROGEN PEROXIDE
HH	HANDHOLE
HMI	HUMAN MACHINE INTERFACE
HOA	HAND-OFF-AUTOMATIC
HOR	HAND-OFF-REMOTE
HORIZ	HORIZONTAL
HP	HORSEPOWER
HPS	HIGH PRESSURE SODIUM
HTR	HEATER
HV	HIGH VOLTAGE
HZ	HERTZ (CYCLES PER SECOND)
IND LT	INDICATING LIGHT
INCAND	INCANDESCENT
INSTR	INSTRUMENT, INSTRUMENTATION
I/O	INPUT/OUTPUT
JB	JUNCTION BOX
KA	KILOAMPERES
KCMIL	THOUSANDS OF CIRCULAR MILS
KV	KILOVOLTS
KVA	KILOVOLT AMPERES
KVAR	KILOVOLT AMPERES REACTIVE
KVARH	KILOVOLT AMPERES REACTIVE HOURS
KW	KILOWATTS
KWH	KILOWATT HOURS
LCP	LOCAL CONTROL PANEL
LOR	LOCAL-OFF-REMOTE
LP	LIGHTING PANEL
LPS	LOW PRESSURE SODIUM
LTG	LIGHTING
LT(S)	LIGHT(S)
(M)	MODIFIED
mA	MILLIAMPERES
MAX	MAXIMUM
MCB	MAIN CIRCUIT BREAKER
MCC	MOTOR CONTROL CENTER
MCP	MOTOR CIRCUIT PROTECTOR
MFR	MANUFACTURER
MH	MANHOLE
MIN	MINIMUM
MISC	MISCELLANEOUS
MLO	MAIN LUG ONLY
MOV	MOTOR OPERATED VALVE
MS	MOTOR STARTER
MTD	MOUNTED
MTG	MOUNTING
MTS	MANUAL TRANSFER SWITCH
(N)	NEW
NC	NORMALLY CLOSED
NEC	NATIONAL ELECTRICAL CODE
NEMA	NATIONAL ELECTRICAL MANUFACTURER'S ASSOC.
NEUT	NEUTRAL
NIC	NOT IN CONTRACT
NO	NORMALLY OPEN, NUMBER
NTS	NOT TO SCALE
OH	OVERHEAD
OT	OVER TEMPERATURE
OL	THERMAL OVERLOAD RELAY
PB	PULLBOX, PUSHBUTTON
PD	POSITIVE DISPLACEMENT
PE	PHOTOELECTRIC
PEC	PHOTOELECTRIC CELL
PF	POWER FACTOR
PFR	POWER FACTOR RELAY
pH	MEASURE OF ACIDITY OR ALKALINITY
PH	PHASE
PLC	PROGRAMMABLE LOGIC CONTROLLER
PNL	PANEL
PNLBD	PANELBOARD
PRI	PRIMARY
PS	PRESSURE SWITCH
PSI	POUNDS PER SQUARE INCH
PVC	POLYVINYL CHLORIDE
PWR	POWER
(RL)	RELOCATE
(RLD)	RELOCATED
RCPT	RECEPTACLE
RCT	REPEAT CYCLE TIMER
REQD	REQUIRED
RM	ROOM
RPM	REVOLUTIONS PER MINUTE
RT	RESET TIMER
SCR	SILICON CONTROLLED RECTIFIER
SD	SMOKE DETECTOR
SEC	SECONDS, SECONDARY
SECT	SECTION
SF	SUPPLY FAN
SHH	SIGNAL HANDHOLE
SHT	SHEET
SIG	SIGNAL
SPECS	SPECIFICATIONS
SPD	SURGE PROTECTIVE DEVICE
SPDT	SINGLE POLE, DOUBLE THROW
SS	STAINLESS STEEL, SOLID STATE
SW	SWITCH
SWBD	SWITCHBOARD
SWGR	SWITCHGEAR
SYNC	SYNCHRONIZING
TB	TERMINAL BLOCK
TC	TELEPHONE CABINET
TEL	TELEPHONE
TEMP	TEMPERATURE
TSP	TWISTED SHIELDED PAIR
TVSS	TRANSIENT VOLTAGE SURGE SUPPRESSOR
TYP	TYPICAL
UG	UNDERGROUND
UH	UNIT HEATER
UV	ULTRA VIOLET
V	VOLTS
VA	VOLT-AMPERES
VFD	VARIABLE FREQUENCY DRIVE (AC)
VAR	VOLT AMPERES REACTIVE
VERT	VERTICAL
VH	VAR-HOUR
VS	VOLTMETER SWITCH
W	WIRE, WATTS
WHM	WATTHOUR METER
WHDM	WATTHOUR DEMAND METER
WR	WEATHER RESISTANT
WT	WATERTIGHT
WTP	WATER TREATMENT PLANT
XFMR	TRANSFORMER

GENERAL NOTES:

G1. THESE DRAWINGS ARE DIAGRAMMATIC ONLY; EXACT LOCATIONS OF ELECTRICAL EQUIPMENT SHALL BE DETERMINED IN THE FIELD BY THE ENGINEER. THE INSTALLATION OF ALL EQUIPMENT SHOWN ON THESE DRAWINGS OR DESCRIBED IN THE SPECIFICATIONS SHALL CONFORM TO THE REQUIREMENTS SET FORTH IN THE LATEST EDITIONS OF ALL APPLICABLE CODES AND UTILITY COMPANY STANDARDS. CONTACT THE UTILITY COMPANY REPRESENTATIVES AND VERIFY THEIR REQUIREMENTS.

G2. THIS IS A GENERALIZED LEGEND SHEET. THIS CONTRACT MAY NOT USE ALL INFORMATION SHOWN.

G3. NOTIFY THE ENGINEER IMMEDIATELY IF CONFLICTS IN EQUIPMENT LOCATIONS ARE DISCOVERED OR IF PROBLEMS ARISE DUE TO FIELD CONDITIONS, LACK OF INFORMATION OR ANY OTHER REASON. NO PAYMENT WILL BE MADE FOR CHANGES WHICH HAVE NOT BEEN FAVORABLY REVIEWED BY THE ENGINEER.

G4. INFORMATION SHOWN MAY NOT BE ALL INCLUSIVE. SEE ALSO ANSI C37.2, Y1.1, Y32.2, AND Y32.9.

G5. VERIFY ALL COLOR REQUIREMENTS BEFORE ORDERING MATERIALS.

G6. REFER TO THE MECHANICAL DRAWINGS FOR CERTAIN CONTROL DIAGRAMS AND EXACT LOCATIONS OF MECHANICAL EQUIPMENT AND FOR CERTAIN CONNECTIONS TO BE MADE TO ELECTRICAL CIRCUITS.

PLAN NOTES:

P1. CONDUIT SIZE AND FILL SHALL BE AS INDICATED. WHERE NO SIZE IS SHOWN, THE CONDUIT SHALL BE SIZED IN ACCORDANCE WITH THE EDITION OF THE NATIONAL ELECTRICAL CODE ADOPTED BY THE AUTHORITY HAVING CODE ENFORCEMENT JURISDICTION. WHERE NO FILL IS INDICATED, THE FILL SHALL BE 2#12. PROVIDE 3/16 INCH NYLON PULL ROPE IN EACH EMPTY CONDUIT.

P2. LOWER CASE LETTERS ADJACENT TO A SWITCH OR LIGHT FIXTURE INDICATE A SWITCHED CIRCUIT. FOR FOUR LAMP FIXTURES WIRED IN PAIRS WITHIN EACH FIXTURE, THE "a" SWITCH CONTROLS THE OUTER LAMPS AND THE "b" SWITCH CONTROLS THE INNER LAMPS; WIRE 3 LAMP FIXTURES SIMILARLY.

P3. CONDUIT AND WIRE LAYOUT FOR LIGHTING AND RECEPTACLES NOT SHOWN. PROVIDE PER NEC.

100% NOT FOR CONSTRUCTION

PLAN SYMBOLS

OVERHEAD POWER LINE
UNDERGROUND CONDUIT
MULTIPLE CONDUIT RUN
CONDUIT CONCEALED IN FLOOR
CONDUIT CONCEALED IN WALL OR CEILING
CONDUIT EXPOSED
CALLOUT INDICATING CONDUIT SIZE, NUMBER OF WIRES AND WIRE SIZE (3/4"C-3#12)
CALLOUT INDICATING CONDUIT PER SCHEDULE (135)
CONDUIT RUN, HATCH MARKS INDICATE NO. OF #12 CONDUCTORS NO HATCH MARKS IS 2#12 UNLESS OTHERWISE NOTED
HOME RUN TO PANELBOARD OR AS INDICATED
FLEXIBLE CONDUIT
CONDUIT RUN, BROKEN AND CONTINUED ON SAME SHEET OR AS NOTED
CAP ON CONDUIT STUB
OPEN CIRCLE DENOTES UPWARD CONDUIT RISER
SEMI CIRCLE DENOTES DOWNWARD CONDUIT RISER
INDICATES REMOVAL
FIRE ALARM CONDUIT (FA)
TELEPHONE CONDUIT (T)
SECURITY SYSTEM CONDUIT (S)
120V SURFACE MOUNTED PANELBOARD
120V FLUSH MOUNTED PANELBOARD
480V SURFACE MOUNTED PANELBOARD
480V FLUSH MOUNTED PANELBOARD
MOTOR
DISCONNECT SAFETY SWITCH
COMBINATION MOTOR STARTER
MANUAL MOTOR STARTER (S_{MS})
CONTROL STATION
EQUIPMENT MOUNTING STAND
GROUND ROD AND BOX
INSTRUMENT
ELECTRIC MANHOLE / POWER HANDHOLE / SIGNAL HANDHOLE (EMH EHH SHH)
INTRUSION REMOTE KEY PAD
INTRUSION DOOR SWITCH
SECURITY ALARM PANEL (SAP)
EQUIPMENT CONNECTION

SINGLE POLE SWITCH (S_*)
2 = 2 POLE, 3 = 3 WAY, 4 = 4 WAY, K = KEY OPERATED, WR = WEATHER RESISTANT, D = DIMMER, P = SWITCH WITH PILOT LIGHT
SINGLE POLE SWITCH (NOTE P2) (S^{ab})
FIXTURE (NOTE P2) SEE FIXTURE SCHEDULE
FIXTURE WITH NIGHT LIGHTING (UNSWITCHED) OR FIXTURE WITH SELF-CONTAINED EMERGENCY BALLAST/BATTERY
WALL/CEILING MOUNTED FIXTURE
WALL/CEILING MOUNTED FIXTURE NIGHT LIGHTING (UNSWITCHED)
POLE MOUNTED FIXTURE
WALL/CEILING MOUNTED EXIT LIGHT - DIRECTIONAL ARROW WHERE INDICATED, SHADED AREA INDICATES ILLUMINATED FACE
EMERGENCY LIGHT WITH SELF CONTAINED BATTERY
LIGHT FIXTURE IDENTIFICATION (A ELEV / CTK #)
SINGLE RECEPTACLE, 120V
SINGLE RECEPTACLE, 240V
DUPLEX WALL RECEPTACLE, 120V, WR = WEATHER RESISTANT, G = GROUNDED, IG = ISOLATED GROUND, GF = GROUND FAULT INTERRUPTER
DUPLEX DOUBLE WALL RECEPTACLE, 120V
DUPLEX FLOOR RECEPTACLE, 120V
MULTI-OUTLET ASSEMBLY WITH SINGLE RECEPTACLE, 120V SPACING (X INCHES) AS NOTED, MOUNTING HEIGHT AS NOTED (X")
RECEPTACLE, 480V
WALL/CEILING MOUNTED JUNCTION BOX (J)
FLOOR RECESS MOUNTED JUNCTION BOX (J)
THERMOSTAT, WALL MOUNTED (T)
WALL TELEPHONE OUTLET (+12") (T)
DATA WALL OUTLET (D)
TELE-DATA WALL OUTLET (TD)
FLOOR OUTLETS (F F F)
FIRE ALARM PULL STATION (F)
FIRE ALARM FLASHING LIGHT (F)
FIRE ALARM HORN (F)
BELL (B)
BUZZER
HEAT DETECTOR (H)
SMOKE DETECTOR (S)
FIRE ALARM CONTROL PANEL (FACP)
PROXIMITY SENSOR
WALL SENSOR (S)
ANTENNA

SINGLE LINE SYMBOLS

GROUND CONNECTION
SWITCH, 3 POLE EXCEPT WHERE NOTED. RATING IN AMPERES AS NOTED
AUTOMATIC TRANSFER SWITCH 3 POLE, RATING AS NOTED
SHUNT TRIP (ST)
FUSE (TB-# #A 1)
FUSE CUTOUT
CIRCUIT BREAKER, 3-POLE EXCEPT WHERE NOTED. RATING IN AMPERES AS NOTED. TOP INDICATION IS FRAME SIZE, BOTTOM IS TRIP RATING. (100AF / 100AT)
MCP CIRCUIT BREAKER, 3-POLE EXCEPT WHERE NOTED. RATING IN AMPERES AS NOTED. TOP INDICATION IS CONTINUOUS CURRENT RATING. (100A / MCP)
THERMAL-MAGNETIC CIRCUIT BREAKER, 3-POLE EXCEPT WHERE NOTED. RATING IN AMPERES AS NOTED. BOTTOM INDICATION IS INSTANTANEOUS TRIP RATING. (TM / 100AT)
POWER CIRCUIT BREAKER DRAWOUT ABOVE 1500V RATING AS NOTED
CURRENT TRANSFORMER
VOLTAGE TRANSFORMER
POWER OR DISTRIBUTION TRANSFORMER RATING AS NOTED
MOTOR, NUMBER INDICATES HORSEPOWER (100)
GENERATOR (GEN)
CONTROL PACKAGE PROVIDED WITH THE DRIVEN EQUIPMENT
BUS STAB ON MCC OR SWITCHGEAR, CORD & PLUG CONNECTION FOR MOTORS
THERMAL OVERLOAD (OL)
* A - AMMETER, V - VOLTMETER, WH - WATTHOUR METER, GS - GROUND FAULT SENSOR
AMMETER SWITCH (AS)
VOLTMETER SWITCH (VS)
ELEMENTARY DIAGRAM REFERENCE NUMBER (2)
KIRK KEY INTERLOCK (K)
POWER RECEPTACLE FOR PORTABLE EQUIPMENT
RELAY DEVICE FUNCTION, # PER ANSI NUMBER C37.2 (#)
TERMINATOR / POTHEAD
SPLICE, TERMINATION
MOTOR STARTER NUMBER INDICATES NEMA SIZE (1)
CAPACITOR - KVAR INDICATED (5)
VFD - VARIABLE FREQUENCY DRIVE SS - SOLID STATE STARTER (VFD)
SS STARTER WITH BUILT-IN FULL SPEED CONTACTOR (SS)
SOLID STATE OVERLOAD (SSOL)
SURGE PROTECTIVE DEVICE (SPD)
MOTOR HEATER

ELEMENTARY DIAGRAM SYMBOLS

FUSE. RATING IN AMPERES
MOTOR (M)
ELAPSED TIME METER (ETM)
CONTROL DEVICE COIL. PREFIX NUMBER, WHEN USED, DISTINGUISHES BETWEEN DEVICES OF THE SAME TYPE. (**)
** ALT - ALTERNATOR; CR - CONTROL RELAY; GR - GENERAL RELAY; ISR - INTRINSICALLY SAFE RELAY; LR - LATCH RELAY; PR - PROBE RELAY; SV - SOLENOID VALVE; TD - TIME DELAY RELAY; TR - TIMING RELAY
INDICATING LIGHT (?)
PUSH-TO-TEST INDICATING LIGHT
* COLORS: A - AMBER, B - BLUE, C - CLEAR, G - GREEN, R - RED, N - NEON, W - WHITE, Y - YELLOW
SINGLE POLE SWITCH NORMALLY OPEN / CLOSED (ON OFF)
EMERGENCY PUSHBUTTON NORMALLY OPEN / CLOSED (START STOP)
PUSHBUTTON NORMALLY OPEN / CLOSED (START STOP)
SWITCH 1-POLE / 3-POLE
MULTI-POSITION SELECTOR SWITCH (H O A)
HAND-OFF-AUTOMATIC SWITCH X-INDICATES CONTACTS CLOSED
HAND-OFF-REMOTE SWITCH X-INDICATES CONTACTS CLOSED (H O R)
TERMINAL
CONTROL POWER TRANSFORMER (H1 H3 H2 H4 / X1 X2)
AMP/FRAME
AMPS / POLES CIRCUIT BREAKER, MCP 1-POLE / 3-POLE
GROUND CONNECTION
INSTRUMENT
CONTACT NORMALLY OPEN / CLOSED (NO CR NC CR)
BUS STAB ON MCC; CORD & PLUG CONNECTION FOR MOTORS
SCR

CROSS REFERENCE TO ANOTHER DIAGRAM (1 CR 2-2, 3, 0, 0)
NORMALLY OPEN CONTACT ON THE OTHER DIAGRAM
SPARE CONTACTS ON RELAY. IF OMITTED, THEN THE SPEC. REQUIREMENTS REGARDING SPARE CONTACTS APPLY.
CONSTRUCTION NOTES:
1. XXXXX — NORMALLY CLOSED CONTACT ON THIS DIAGRAM

SENSING SWITCHES		
CLOSE ON		SENSED VARIABLE
RISING	FALLING	
FS	FS	FLOW
LS	LS	LEVEL
PS	PS	PRESSURE
TS	TS	TEMPERATURE
LIMIT SWITCHES		
ZS	CLOSE ON REACHING LIMIT	
ZS	CLOSE ON LEAVING LIMIT	

TIMED CONTACTS			
SYMBOL	NORMAL	OPEN TO CLOSED	CLOSED TO OPEN
TR	OPEN	DELAYED	INSTANTANEOUS
TR	CLOSED	INSTANTANEOUS	DELAYED
TR	OPEN	INSTANTANEOUS	DELAYED
TR	CLOSED	DELAYED	INSTANTANEOUS

BUZZER; BELL; HORN
OL — THERMAL OVERLOAD

ELEMENTARY DIAGRAMS

E1 UNDERLINED WORDS SHOWN AT A PUSHBUTTON, LIGHT, SELECTOR SWITCH, ETC. INDICATE THE LEGEND PLATE REQUIREMENT FOR THAT PARTICULAR DEVICE. ANY ADDITIONAL NAMEPLATES ARE INDICATED ON ELEVATIONS WITH THE REQUIRED NAMEPLATE INSCRIPTIONS.

E2 "NORMAL" STATUS OF SWITCHES OR CONTACTS IS THE SHELF POSITION.

E3 NUMBERS AND LETTERS IDENTIFY DEVICE.

REV. NO.	DATE	DESCRIPTION	APPVD.	DATE

REVISIONS

DESIGN: EEH
DRAWN: EEH
CHECKED: JRM

ENGINEER'S SEAL

LAS VIRGENES MUNICIPAL WATER DISTRICT

TWIN LAKES PUMP STATION PIPELINE

ELECTRICAL
LEGEND AND ABBREVIATIONS

PREPARED BY:
LVMWD ENGINEERING
4232 LAS VIRGENES ROAD
CALABASAS, CALIFORNIA 91302

APPROVED FOR LAS VIRGENES MUNICIPAL WATER DISTRICT
BY: _____
PRINCIPAL ENGINEER
R.C.E.
DATE: _____

SCALE:
DATE:

Q:\Ventura2017\1744213.00_LVMWD_Twin_Lakes_Pipeline\10-EngDesign\10.02-Cntrct-RefDwgs\CAD\1744213.00-SHEET-14.dwg 10/19/2022 2:22 PM ERICK ALMAEL

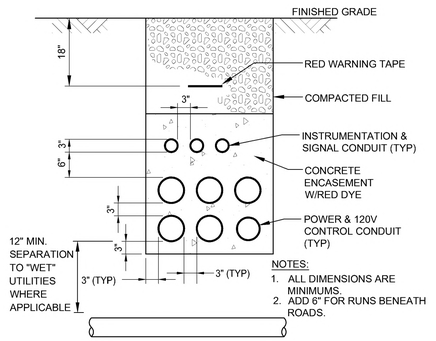

NOTES:
1. ALL DIMENSIONS ARE MINIMUMS.
2. ADD 6" FOR RUNS BENEATH ROADS.

TYPICAL UNREINFORCED DUCT BANK — E-0204

SCALE: NTS
REV 00

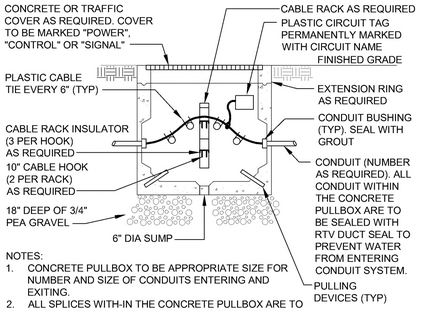

NOTES:
1. CONCRETE PULLBOX TO BE APPROPRIATE SIZE FOR NUMBER AND SIZE OF CONDUITS ENTERING AND EXITING.
2. ALL SPLICES WITH-IN THE CONCRETE PULLBOX ARE TO BE SEALED WITH AN INSULATING AND ENCAPSULATING RESIN PACK, SCOTCHCAST 4 OR EQUAL.

HANDHOLE/PULLBOX INSTALLATION — E-0207

PRECAST CONCRETE
SCALE: NTS
REV 00

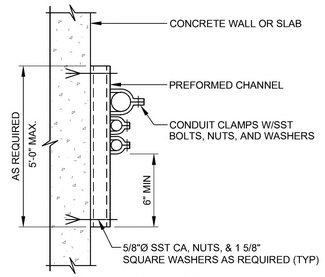

ELEVATION

NOTES:
1. THIS DETAIL TYPICAL FOR BOTH VERTICAL AND HORIZONTAL MOUNTING.
2. PREFORMED CHANNEL, FITTINGS AND CLAMPS SHALL BE HOT-DIP GALVANIZED STEEL. FIELD COAT ALL CUTS PER SPECIFICATIONS.
3. CHANNELS TO BE SPACED AT 5'-0" OC MAXIMUM.

CONDUIT SUPPORT - 2 — E-0602

SCALE: NTS
REV 00

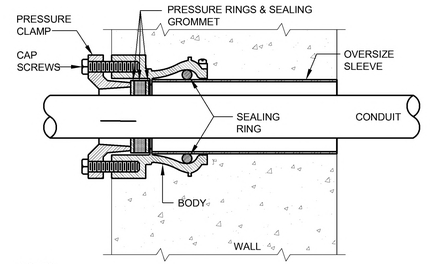

NOTES:

PROVIDE CONDUIT SEAL IN WALL AND FLOOR WHERE PENETRATION ARE BELOW GRADE OR GROUND WATER LEVEL AND ENTERING INTO WATER CONTAINMENT RESERVOIR.
MFR: O-Z/GEDNEY, TYPE FSK

CONDUIT SEAL — E-0618

SCALE: NTS
REV 00



CONDUIT STUB-UP DETAIL 'G' — E-0612

SCALE: NTS
REV 00

PVC CONDUIT STUB-UP — E-0615

SCALE: NTS
REV 00

100% NOT FOR CONSTRUCTION

DESIGN:	EEH
DRAWN:	EEH
CHECKED:	JRM

ENGINEER'S SEAL

REV. NO.	DATE	DESCRIPTION	APPVD.	DATE

REVISIONS

LAS VIRGENES MUNICIPAL WATER DISTRICT

TWIN LAKES PUMP STATION PIPELINE

ELECTRICAL DETAILS

PREPARED BY:

LVMWD ENGINEERING
4232 LAS VIRGENES ROAD
CALABASAS, CALIFORNIA 91302

APPROVED FOR LAS VIRGENES MUNICIPAL WATER DISTRICT

BY: _____

PRINCIPAL ENGINEER
R.C.E.

DATE: _____

SCALE:

DATE:

SHEET 15 OF 19

ERICK ALMALEL 10/19/2022 2:22 PM
Q:\Ventura\2017\1744213.00_LVMWD_Twin_Lakes_Pipeline\10-EngDesign\10.02-Cntrct-RefDwgs\CAD\1744213.00-SHEET-15.dwg

NOTES:

1. CONTRACTOR SHALL POTHOLE TO VERIFY LOCATION AND DEPTH OF EXISTING UTILITIES AROUND THE PROPOSED LOCATION OF THE VAULT AND CONDUIT ROUTE. ALL EXISTING UTILITIES SHALL BE PROTECTED IN PLACE.
2. CONTRACTOR SHALL COORDINATE WITH GENERATOR PROJECT TO ENSURE NO CONFLICTS WITH CONDUIT ROUTING TO THE GENERATOR.
3. CONTRACTOR SHALL BOND GROUNDING PLATE TO EXISTING GROUND SYSTEM AT NEAREST LOCATION POSSIBLE WITH #3/0 BARE COPPER GROUND CABLE.

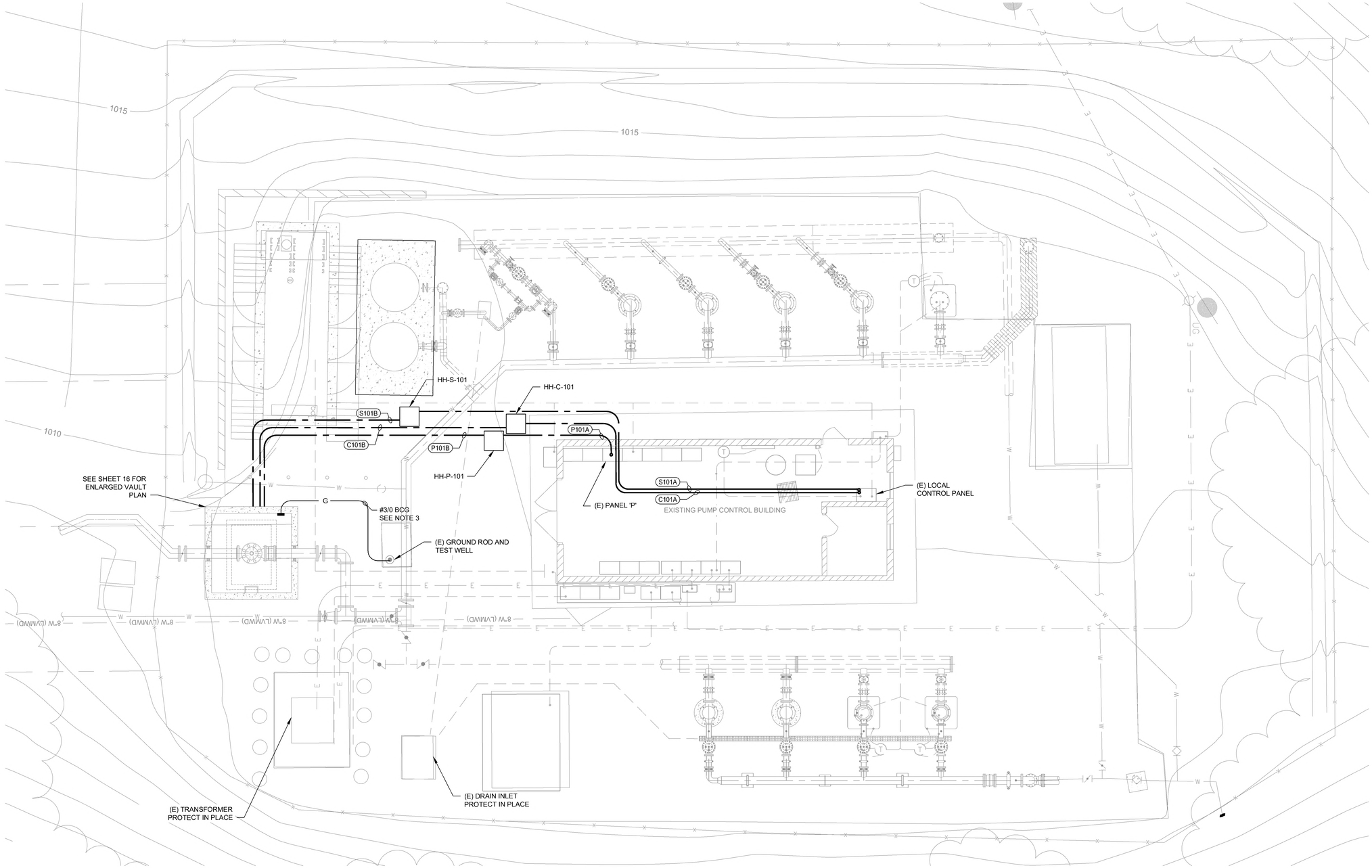

SITE PLAN

100% NOT FOR CONSTRUCTION

DESIGN:	EEH
DRAWN:	EEH
CHECKED:	JRM

ENGINEER'S SEAL

REV. NO.	DATE	DESCRIPTION	APPVD.	DATE

REVISIONS

LAS VIRGENES MUNICIPAL WATER DISTRICT

TWIN LAKES PUMP STATION PIPELINE

SITE PLAN

PREPARED BY:

LVMWD ENGINEERING
4232 LAS VIRGENES ROAD
CALABASAS, CALIFORNIA 91302

APPROVED FOR LAS VIRGENES MUNICIPAL WATER DISTRICT

BY: _____

PRINCIPAL ENGINEER
R.C.E.

DATE: _____

SCALE: HORIZONTAL: 1" = 5'

DATE:

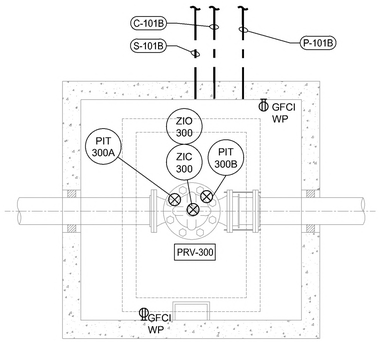

VAULT PLAN 1
SCALE: 3/8"=1'-0"

NOTES:

1. CONTRACTOR SHALL FIELD VERIFY PANEL LOAD PRIOR TO CONNECTION OF NEW LOADS TO ENSURE IT DOES NOT OVERLOAD THE PANEL.

(E) PANEL 'P'					FED FROM: (E) MCC-101				
240	/120 VOLTS, SINGLE PHASE, 3 WIRE			AIC: 10KA		MAIN: 50A/2P	MOUNTING: MCC		
CKT. NO.	DESCRIPTION	CONNECTED KVA		TRIP AMPS/ POLES	CKT. NO.	DESCRIPTION	CONNECTED KVA		TRIP AMPS/ POLES
		A	B				A	B	
1	(E) 5201 FIT 306	0.1		20/1	2	(E) PLC	1.2		20/1
3	(E) 5202 FIT 308		0.1	20/1	4	(E) PRV POWER		0.1	20/1
5	(E) EXTERIOR GFCI RECEPTACLE	0.2		20/1	6	SPARE	0.0		20/1
7	VAULT RECEPTACLES		0.3	20/1	8	(E) EXTERIOR LIGHTING		0.2	20/1
9	SPARE	0.0		20/1	10	SPARE	0.0		20/1
11	SPARE		0.0	20/1	12	(E) INTERIOR RECEPTACLE		0.2	20/1
13	SPARE	0.0		20/1	14	(E) INTERIOR LIGHTS	0.2		20/1
15	SPARE		0.0	20/1	16	(E) MWD METER		1.0	40/2
17	SPARE	0.0		20/1	18		1.0		
PHASE SUBTOTALS (KVA):		0.2	0.4				2.4	1.5	
PHASE TOTALS (KVA):							2.6	1.9	
TOTAL KVA:								4.5	KVA
TOTAL AMPERES:								19	A

PANEL SCHEDULE

CONDUIT AND WIRE SCHEDULE							
NUMBER	FROM	TO	SIZE (")	POWER	CONTROL	SIGNAL	COMMENTS
AREA/GROUP							
P-101A	(E) PANEL 'P'	HH-P-101	1	2#12, 1#12G			
P-101B	HH-P-101	VAULT RECEPTACLES	1	2#12, 1#12G			
C-101A	(E) LOCAL CONTROL PANEL	HH-C-101	1		4#14, 1#14G		
C-101B	HH-C-101	PRV-300	1		4#14, 1#14G		ZIO-300, ZIC-300
S-101A	(E) LOCAL CONTROL PANEL	HH-S-101	1			2-2/C#16TSP	
S-101B	HH-S-101	PRV-300	1			2-2/C#16TSP	PIT-300A, PIT-300B

CONDUIT AND WIRE SCHEDULE

100% NOT FOR CONSTRUCTION

DESIGN:	EEH
DRAWN:	EEH
CHECKED:	JRM

ENGINEER'S SEAL

REV. NO.	DATE	DESCRIPTION	APPVD.	DATE

REVISIONS

LAS VIRGENES MUNICIPAL WATER DISTRICT

TWIN LAKES PUMP STATION PIPELINE

VAULT PLAN, PANEL SCHEDULE, CONDUIT AND WIRE SCHEDULE

PREPARED BY:
LVMWD ENGINEERING
4232 LAS VIRGENES ROAD
CALABASAS, CALIFORNIA 91302

APPROVED FOR LAS VIRGENES MUNICIPAL WATER DISTRICT
BY: _____
PRINCIPAL ENGINEER
R.C.E.
DATE: _____

SCALE:
DATE:

SHEET 17 OF 19

ERICK ALMALEL 10/19/2022 2:23 PM
Q:\Ventura\20171744213.00_LVMWD_Twin_Lakes_Pipeline\10-EngDesign\10.02-Cntrct-RefDwgs\CAD\1744213.00-SHEET-17.dwg

INSTRUMENT IDENTIFICATION LETTERS (FSS)

	FIRST - LETTER (F)		SUCCEEDING - LETTERS (SS)		
	MEASURED OF INITIATING VARIABLE	MODIFIER	READOUT PASSIVE FUNCTION	OUTPUT FUNCTION	MODIFIER
A	ANALYSIS		ALARM		
B	BURNER, COMBUSTION		USER'S CHOICE	USER'S CHOICE	USER'S CHOICE
C	CONDUCTIVITY			CONTROLLER	
D	DENSITY	DIFFERENTIAL			
E	VOLTAGE		SENSOR, PRIMARY ELEMENT		
F	FLOW RATE	RATIO (FRACTION)			
G	GAUGE, GENERAL		GLASS VIEWING DEVICE		
H	HAND				HIGH, OPENED
I	CURRENT (ELEC.)		INDICATING, INDICATOR		
J	POWER		SCAN		
K	TIME, TIME SCHEDULE	TIME RATE OF CHANGE		CONTROL STATION	
L	LEVEL		LIGHT		LOW, CLOSED
M	MOISTURE, MOTION	MOMENTARY			MIDDLE
N	INTRUSION, STATUS	MOMENTARY	STATUS	USER'S CHOICE	USER'S CHOICE
O	OPERATOR, TORQUE		ORIFICE, RESTRICTION		USER'S CHOICE
P	PRESSURE, VACUUM		POINT (TEST) CONNECTION		
Q	QUANTITY	INTEGRATE, TOTALIZE			
R	RESET, RADIATION		RECORD OR PRINT		
S	SPEED, FREQUENCY	SAFETY		SWITCH	SLOW
T	TEMPERATURE			TRANSDUCER, TRANSMITTER	TEST
U	MULTIVARIABLE		MULTIFUNCTION	MULTIFUNCTION	MULTIFUNCTION
V	VIBRATION, MECH. ANALYSIS			VALVE, DAMPER LOUVER	
W	WEIGHT, FORCE		WELL		
X	SWITCH	X AXIS	UNCLASSIFIED	UNCLASSIFIED	UNCLASSIFIED
Y	EVENT, STATE, PRESENCE	Y AXIS	UNCLASSIFIED	RELAY, COMPUTE, CONVERT	
Z	POSITION DIMENSION	Z AXIS		DRIVER, ACTUATOR, UNCLASSIFIED FINAL CONTROL ELEMENT	

LINE CODES

- MAJOR PROCESS LINE — 00"–XXX — LINE SIZE & NUMBER
- MINOR PROCESS LINE — PROCESS CONTINUATION WITHIN SCOPE
- EXISTING PROCESS AIR
- NEW PROCESS AIR
- ELECTRICAL
- PLC TO SCADA COMMUNICATION
- AUTO-DIALER AND PRIORITY LEVEL

INSTRUMENT NUMBERING

AATT FSS LLLL
XX — DEVICE FUNCTION
EQUIPMENT NUMBER

LINE NUMBERING

00" - INFLT - 001 (EXAMPLE)
- SEQUENTIAL LINE NO.
- FLUID CODE
- NOMINAL LINE SIZE

EQUIPMENT NUMBERING

AATT FSS LLLL
- LOOP ID MODIFIER (USED WITH TWO OR MORE IDENTICAL INSTRUMENTS)
- LOOP ID
- SUCCEEDING LETTER INSTRUMENT ID
- FIRST LETTER INSTRUMENT ID
- SYSTEM LOCATION
- AREA LOCATION

AREA LOCATION (AA)

52	TWIN LAKES PS

SYSTEM LOCATION (TT)

01	PROCESS

FLUID CODE ABBREVIATION

BP	BYPASS
BW	BACKWASH
CDS	CHEMICAL DOSING
CMPR	COMPRESSOR/CMPRSD AIR
CNTRT	CENTRATE
CVR	CONVEYOR
EFFLT	EFFLUENT
EXH	EXHAUST/EXHAUST FAN
FA	FOUL AIR
FLTRT	FILTRATE
FW	FILTERED WATER
INFLT	INFLUENT
MLSS	MIX LIQUOR
OFS	OFF SPEC. WATER
OVRFL	OVERFLOW
PA	PROCESS AIR
PRMT	PERMEATE
PW	POTABLE WATER
RAS	RETURN ACTIVATED SLUDGE
RECYC	RECYCLE
RNS	RINSE
RW	RECLAIMED WATER
SECPR	SECONDARY PROCESS
SD	SLUDGE DISCHARGE
SPNAT	SUPERNATANT
SWR	SEWER
TERT	TERTIARY
TW	TREATED WATER
WAS	WASTE ACTIVATED SLUDGE
WTR	WATER
WW	WASTE WATER

NOT USED

LINE NUMBER GROUPS

000	OVERFLOW/ BYPASS/ DRAIN/ SUPERNATANT
100	INFLUENT/ MIX LIQUOR/ SECONDARY EFFLUENT / EFFLUENT
200	TERTIARY/ REUSE WATER/ BACKWASH/ RECYCLE WATER
300	PERMEATE/ FILTRATE/ CENTRATE
400	PROCESS AIR
500	CHEMICAL DOSING/ POLYMER
600	FOUL AIR
700	WATER/ TREATED WATER/ FILTERED WATER
800	RAS/ SOLIDS
900	WAS/ SCUM/ WASTE WATER/ RAW WATER

GENERAL INSTRUMENT OR FUNCTION SYMBOLS

	FIELD MOUNTED	PRIMARY LOCATION ACCESSIBLE TO OPERATOR	PRIMARY LOCATION INACCESSIBLE TO OPERATOR	AUXILIARY LOCATION ACCESSIBLE TO OPERATOR
DISCRETE INSTRUMENTS				
SHARED DISPLAY SHARED CONTROL				
COMPUTER FUNCTION				
PROGRAMMABLE LOGIC CONTROL				

HARDWARE INTERLOCK

PLC "SOFT" INTERLOCK

VALVE SYMBOLS

NC NO

- GATE VALVE
- GATE VALVE
- BALL VALVE
- DIAPHRAGM VALVE
- PLUG VALVE
- 3-WAY BALL VALVE
- NEEDLE VALVE
- MUD VALVE
- FLANGED BUTTERFLY VALVE
- LUGGED/WAFER BUTTERFLY VALVE
- CHECK VALVE
- DOUBLE LEAF CHECK VALVE
- WEIR GATE/TELESCOPE VALVE

VALVE ACTUATORS

- DIAPHRAGM ACTUATOR
- MOTOR ACTUATOR
- SOLENOID ACTUATOR
- CYLINDER ACTUATOR
- LEVER
- HAND WHEEL
- CHAIN WHEEL

RELIEF DEVICES

- AIR/PRESSURE RELIEF
- VACUUM RELIEF
- RUPTURE DISK FOR PRESSURE RELIEF
- RUPTURE DISK FOR VACUUM RELIEF

REGULATORS

- PRESSURE REDUCING
- BACK PRESSURE
- REGULATOR WITH EXTERNAL PILOT
- DIFFERENTIAL PRESSURE

PIPING SYMBOLS

- Y STRAINER
- BLIND FLANGE
- FUNNEL
- CONCENTRIC REDUCER
- ECCENTRIC REDUCER
- EDUCTOR
- WELDED CAP
- WELDED PIPE END
- SCREWED CAP
- UNION
- CAMLOCK FITTING
- FLEXIBLE LINE
- SPECTACLE BLIND
- EXPANSION JOINT
- TIE-IN POINT

MECHANICAL EQUIPMENT

- METERING PUMP
- ULTRA SONIC LEVEL TRANSMITTER
- CENTRIFUGAL PUMP OR BLOWER
- CHEMICAL INJECTOR
- SUBMERSIBLE PUMP
- FLOW METER OR MOTOR
- TURBINE PUMP
- ROTOMETER
- MAZZI INJECTOR
- ROTARY BLOWER
- VORTEX SHEDDING
- SONIC
- MIXER
- GRINDER
- STATIC MIXER
- PROGRESSIVE CAVITY PUMP
- AERATOR
- EXHAUST FAN
- VERTICAL MULTI-STAGE PUMP
- ROTARY LOBE PUMP

NOTE: ALL PRESSURE GAUGES AND OTHER SMALL PROCESS MECHANICAL INSTRUMENT EQUIPMENT SHALL BE SUPPLIED WITH ISOLATION VALVES AND ADDITIONAL APPURTENANCES (E.G. PRESSURE PULSATION DAMPENERS/SNUBBERS) AS REQUIRED FOR PROPER OPERATION

ABBREVIATIONS

ACP	ACCESS CONTROL PANEL
AE	ANALYTICAL SENSOR
AI	ANALOG INPUT
AIT	ANALYTICAL INDICATOR TRANSMITTER
AMP	AMPERE
AO	ANALOG OUTPUT
AT	ANALYTICAL TRANSMITTER
ATS	AUTOMATIC TRANSFER SWITCH
BLR	BLOWER
CB	CIRCUIT BREAKER
CBL	COARSE BUBBLE DIFFUSER
CE	CONDUCTIVITY SENSOR (TDS)
CFR	CHEMICAL FEEDER
CG	COMBUSTIBLE GASES
CHV	CHECK VALVE
CL2	CHLORINE
CMP	COMPACTOR
COMP	COMPRESSOR
CON	CONVEYOR
CWC	COMPACTOR/WASHER/CONVEYOR
DCS	DISTRIBUTED CONTROL SYSTEM
DI	DIGITAL INPUT
DO	DISSOLVED OXYGEN / DIGITAL OUTPUT
DRY	BIOSOLIDS DRYER
DSS	DISTRIBUTION SWITCHBOARD SECTION
DWG	DRAWING
EST	EMERGENCY STOP
ETM	ELAPSED TIME METER
EXH	EXHAUST FAN
EXIST	EXISTING
FBD	FINE BUBBLE DIFFUSER
FC	FAIL CLOSED
FCV	MODULATING CONTROL VALVE
FE	FLOW SENSOR
FeCL2	FERROUS CHLORIDE
FI	FLOW INDICATOR
FIT	FLOW INDICATOR TRANSMITTER
FR	FORWARD-REVERSE
FS	FINE SCREEN / FULL SPEED
FT	FLOW TRANSMITTER
FV	FLOW VALVE
GDR	GRINDER
GEN	GENERATOR
GPD	GALLONS PER DAY
GPH	GALLONS PER HOUR
GPM	GALLONS PER MINUTE
H_2S	HYDROGEN SULFIDE
HMI	HUMAN MACHINE INTERFACE
HOA	HAND-OFF-AUTO
HOR	HAND-OFF-REMOTE
JB	JUNCTION BOX
LAN	LOCAL AREA NETWORK
LCP	LOCAL CONTROL PANEL
LE	LEVEL SENSOR
LIT	LEVEL INDICATOR TRANSMITTER
LOS	LOCK-OFF-STOP
LR	LOCAL / REMOTE
LSH	LEVEL SWITCH HIGH
LSHH	LEVEL SWITCH HIGH HIGH
LSL	LEVEL SWITCH LOW
LSLL	LEVEL SWITCH LOW LOW
LSM	LEVEL SWITCH MEDIUM
LT	LEVEL TRANSMITTER
MCAS	MINI CONTROL AND STATUS
MCC	MOTOR CONTROL CENTER
ME	MOISTURE SENSOR
MGD	MILLION GALLONS PER DAY
MGL	MILLIGRAM PER LITER
MOT	MOTOR
MS	MOTOR STARTER
MTU	MASTER TELEMETRY UNIT
MIR	MIXER
$NaHSO_3$	SODIUM BISULFITE
NaOCL	SODIUM HYPOCHLORITE
NTU	TURBIDITY
OC	ODOR CONTROL
OCA	OPEN-CLOSE-AUTO
OCR	OPEN-CLOSE-REMOTE
OFS	OFF SPEC.
OIT	OPERATOR INTERFACE TERMINAL
OO	ON/OFF (MAINTAINED)
OOA	ON-OFF-AUTO
OOR	ON-OFF-REMOTE
OSC	OPEN-STOP-CLOSE
PE	PRESSURE SENSOR
PG	PRESSURE GAUGE
PH	POTENTIAL OF HYDROGEN
PI	PRESSURE INDICATOR / PULSE INPUT
PID	PROPORTIONAL-INTEGRAL-DERIVATIVE
PIT	PRESSURE INDICATOR TRANSMITTER
PLC	PROGRAMMABLE LOGIC CONTROLLER
PMP	PUMP
PNL	PANEL
PO	PULSE OUTPUT
PPG	POUNDS PER GALLON
PPH	POUNDS PER HOUR
PPM	PARTS PER MILLION
PRESS	PRESSURE
PRV	PRESSURE RELIEF OR REDUCING VALVE
PSH	PRESSURE SWITCH HIGH
PSHL	PRESSURE SWITCH HIGH & LOW
PSI	POUNDS PER SQUARE INCH
PSL	PRESSURE SWITCH LOW
PT	PRESSURE TRANSMITTER
REM	REMOTE
RF	RADIO FREQUENCY
RIO	REMOTE INPUT-OUTPUT
RST	RESET
RTU	REMOTE TELEMETRY UNIT
SES	SERVICE ENTRANCE SECTION
SLC	SINGLE LOOP CONTROLLER
SLOS	START-LOCK-OFF-STOP
SO2	SULFUR D
SMU	SUBMERGED MEMBRANE UNIT
SP	SETPOINT
SPD	SPEED
SPR	SPARE
SS	START/STOP (MAINTAINED)
SSS	SOLID STATE STARTER (SOFT START)
STG	MANUAL STOP GATE
SUG	SLUICE GATE
SV	SOLENOID VALVE
TC	TABLET CHLORINATOR
TDS	TOTAL DISSOLVED SOLIDS
TE	TEMPERATURE SENSOR
TG	TEMPERATURE GAUGE
TI	TEMPERATURE INDICATOR
TIT	TEMPERATURE INDICATOR TRANSMITTER
TNK	TANK
TS	TEMPERATURE SWITCH
TSH	TEMPERATURE SWITCH HIGH
TT	TEMPERATURE TRANSMITTER
TV	TELESCOPING VALVE
UPS	UNINTERRUPTIBLE POWER SUPPLY
UVU	ULTRAVIOLET UNIT
V	MANUAL VALVE
VFD	VARIABLE FREQUENCY DRIVE
WE	WEIR
WEG	WEIR GATE
WR	ADJUSTABLE WEIR
XV	AUTOMATED OPEN/CLOSE VALVE
ZS	SWITCH POSITION

100% NOT FOR CONSTRUCTION

DESIGN:	EEH
DRAWN:	EEH
CHECKED:	JRM

ENGINEER'S SEAL

REV. NO.	DATE	DESCRIPTION	APPVD.	DATE

REVISIONS

LAS VIRGENES MUNICIPAL WATER DISTRICT

TWIN LAKES PUMP STATION PIPELINE

INSTRUMENTATION LEGEND AND ABBREVIATIONS

PREPARED BY:
LVMWD ENGINEERING
4232 LAS VIRGENES ROAD
CALABASAS, CALIFORNIA 91302

APPROVED FOR LAS VIRGENES MUNICIPAL WATER DISTRICT
BY: _____
PRINCIPAL ENGINEER
R.C.E.
DATE: _____

SCALE:

DATE:

SHEET 18 OF 19

ERICK ALMALEL 10/19/2022 2:23 PM

Q:\Ventura\2017\1744213.00_LVMWD_Twin_Lakes_Pipeline\10-EngDesign\10.02-Cntrct-Ref\Dwgs\CAD\1744213.00-SHEET-18.dwg

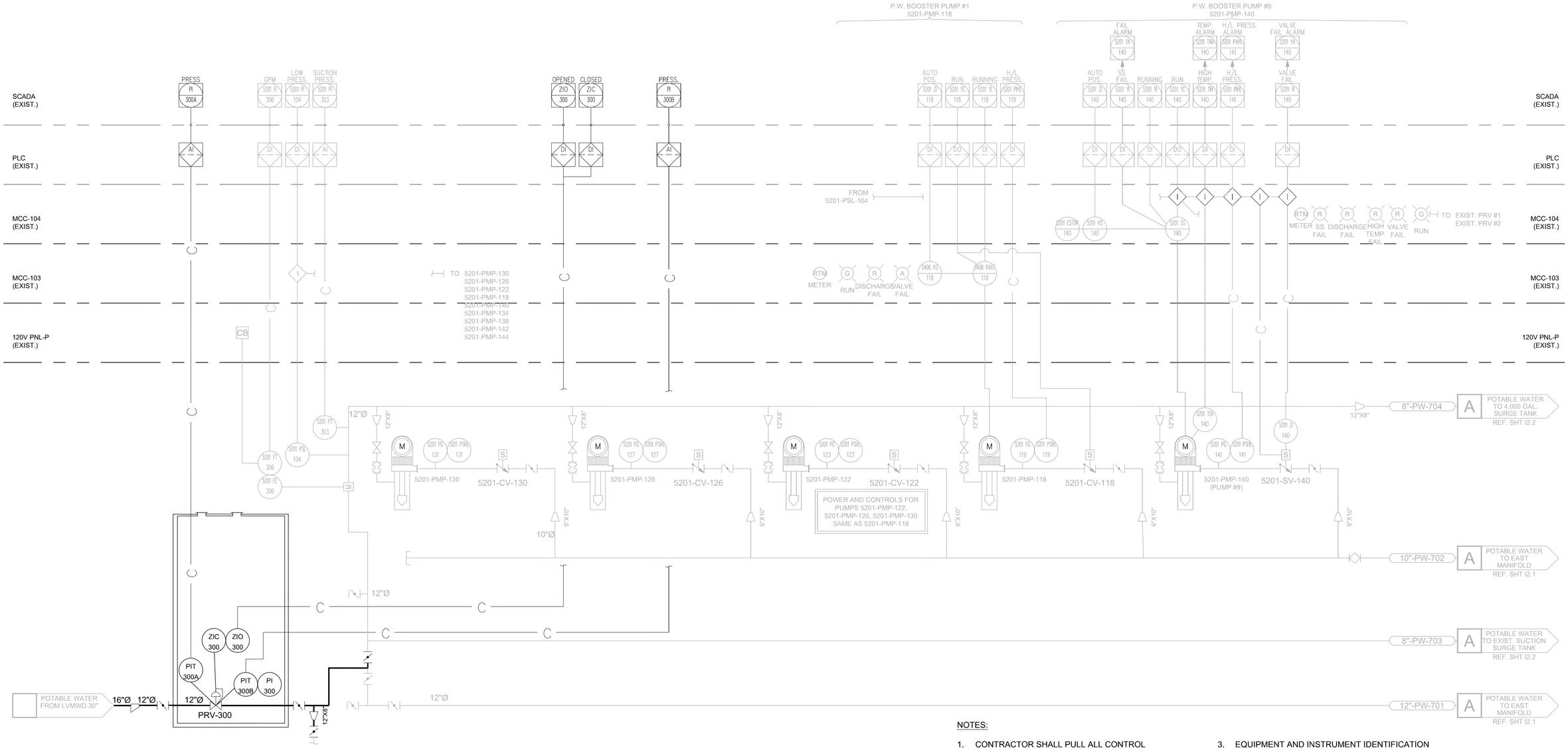

NOTES:

1. CONTRACTOR SHALL PULL ALL CONTROL CONDUCTORS INTO THE PANEL AND TERMINATE.
2. INTEGRATION & PROGRAMMING OF THE PROPOSED IMPROVEMENTS WITHIN THE CONTROL PANEL & SCADA SYSTEM TO BE DONE BY THE DISTRICT. CONTRACTOR SHALL BE RESPONSIBLE FOR FIELD CALIBRATING/PROGRAMING ALL SUPPLIED INSTRUMENTS & EQUIPMENT PER THE DESIGN REQUIREMENT (SEE SPECS.) (I.C. PRESSURE DEAD BAND RANGE ON PRESSURE SWITCHES)
3. EQUIPMENT AND INSTRUMENT IDENTIFICATION NUMBERS SHOWN FOR REFERENCE ONLY. CONTRACTOR SHALL FIELD COORDINATE WITH THE DISTRICT THE FINAL EQUIPMENT AND INSTRUMENT IDENTIFICATION NUMBERS PER DISTRICT STANDARDS.

100% NOT FOR CONSTRUCTION

DESIGN:	EEH
DRAWN:	EEH
CHECKED:	JRM

ENGINEER'S SEAL

REV. NO.	DATE	DESCRIPTION	APPVD.	DATE

REVISIONS

LAS VIRGENES MUNICIPAL WATER DISTRICT

TWIN LAKES PUMP STATION PIPELINE

P&ID

PREPARED BY:

LVMWD ENGINEERING
4232 LAS VIRGENES ROAD
CALABASAS, CALIFORNIA 91302

APPROVED FOR LAS VIRGENES MUNICIPAL WATER DISTRICT

BY: _____

PRINCIPAL ENGINEER
R.C.E.

DATE: _____

SCALE:

DATE:

SHEET 19 OF 19

Q:\Ventura\2017\1744213.00_LVMWD_Twin_Lakes_Pipeline\10-EngDesign\10.02-Cntrct-Ref\Dwgs\CAD\1744213.00-SHEET-19.dwg 10/19/2022 2:24 PM ERICK ALMALEL

FORM GEN. 160 (Rev. 6-80)

CITY OF LOS ANGELES
INTER-DEPARTMENTAL CORRESPONDENCE

DATE: May 22, 2024

TO: Rick Tonthat, Sr. Management Analyst II
Planning, Maintenance and Construction Branch
Department of Recreation and Parks

Attn: Angela Wang, Management Assistant
Real Estate Division

FROM: E. Amy Benson, Director
Department of General Services *E. Amy Benson*
Real Estate Services Division

SUBJECT: APPRAISAL REVIEW REPORT TRANSMITTAL CHATSWORTH PARK NORTH AND CHATSWORTH PARK SOUTH CHATSWORTH CA 91311 APNs: 2723-009-903 and 2723-010-904

As requested, an Appraisal Review Report was completed by Joe J. Villegas, MAI, of Curtis-Rosenthal dated May 17, 2024 for the properties located at Chatsworth Park North and Chatsworth Park South, APNs: 2723-009-903 and 2723-010-904. This review was for a September 9, 2022 Appraisal Report and Update Letter dated April 16, 2024, completed by Jeremy Bagott, MAI, of Hamner, Jewell & Associates. The date of value (effective date) of the original Appraisal Report was August 18, 2022. The effective date of value of the updated appraisal is April 16, 2024.

The Appraisal Review Report confirms and concludes the fair market value opinion as to the Fee Simple Estate in the subject properties as of the effective date:

- Chatsworth Park North & Chatsworth Park South, Fee Simple, Fair Market Value of subject easements, is **$6,500**.

The reports conform to and are intended to be in compliance with the Uniform Standards of Professional Appraisal Practice (USPAP). The staff at the Real Estate Services Division of GSD has reviewed and completed their due diligence of the reports and agrees with the reviewer's conclusion and accepts the appraisal report and the concluded fair market value.

Should you need additional information, please contact Property Manager, Armando Parra, at (213) 922-8546 or by email at armando.parra@lacity.org or Alecia Simona-McGinnis, Senior Real Estate Officer at (213) 922-8558 or by email at alecia.simona@lacity.org.

Attachments: Appraisal Review
Update Letter
Appraisal Report.

Cc: Armando Parra
Alecia Simona-McGinnis

CURTIS-ROSENTHAL, INC.
REAL ESTATE APPRAISAL & CONSULTING

May 17, 2024

Jim Lisciandro
City of Los Angeles
General Services Department
Real Estate Services Division
111 E. First St., Rm. 201
Los Angeles, CA 90012
(213) 949-7030 cell
Office: (213) 922-8559
james.lisciandro@lacity.org

RE: **Appraisal Review:**
Twin Lakes Pump Station Pipeline (Update Letter)
APNs: 2723-009-903 and 904
Chatsworth, California
CR File No. 18282-24

Dear Mr. Lisciandro:

Per your request, we have performed a desk appraisal review of the above-referenced property.

This appraisal review is intended to conform with Standard Rule 3 of the Uniform Standards of Professional Appraisal Practice (USPAP).

This transmittal letter is part of the Appraisal Review Report. The Appraisal Review Report may only be used in conjunction with the entire original appraisal report dated September 9, 2022 and the update letter dated April 16, 2024.

Appraisal Report Under Review:	
Subject Property:	**Twin Lakes Pump Station Pipeline (Update Letter) APNs: 2723-009-903 & 904 Chatsworth, California CR File No. 18282-24**
Property Description:	Proposed permanent and temporary construction easements on approximately 89.38 gross acres.
Effective Date of Value:	April 16, 2024
Ownership Interest Appraised:	Fee Simple Estate
Date of Appraisal Report:	April 16, 2024
Appraisal Firm:	Hamner Jewell Associates, 2674 E. Main Street, Suite E-504, Ventura, CA 93003 Phone: 805-794-0555 Email: jbagott@gmail.com
Signing Appraiser(s):	Jeremy bagott, MAI, AI-GRS California No. AG031250 Certified General R. E. Appraiser
Appraised Value Conclusions:	
Cost Approach	Not Used
Sales Comparison Approach	See next page
Income Approach	Not Used
Conclusion of Market Value	**$6,500**

Appraisal Update Letter
City of Los Angeles Property
APN: 2723-009-903 and 2723-010-904

In the appraiser's opinion, given the mix throughout 2023 and into the first quarter 2024, the residential market has largely stagnated given these headwinds. Many brokers have echoed these sentiments, describing a much-diminished market in the number of sales, a market that is largely going sideways in terms of any appreciation.

Land sales under the categories of "vacant land," "vacant residential land" and "agricultural land" were researched with a focus on rural residential land and open-space land. Development and speculative land at the edge of urban development were examined but discarded. The land sales were focused on the north San Fernando Valley and its outskirts, as well as in parts of East Ventura County. Sales examined were between 5 acres and 150 acres.

Based on the examination of these sales – more details of which are retained in the appraiser's work file – it is the appraiser's opinion that the market for extremely low-density land has not materially changed and no change to the value is warranted.

Assignment Results: The value of the larger parcel and the proposed acquisitions, which can be found on Pages 2-3 and Page 79 of the referenced report, remain unchanged.

Jeremy Bagott, MAI, AI-GRS
Certified General Real Estate Appraiser
California Certificate No. AG031250

Scope of Work:

In conformance with the Scope of Work rule of USPAP, the sections below describe the Scope of Work for this assignment.

Client – The client for this assignment is City of Los Angeles, Real Estate Services Division.

Intended User – The intended user of this report is exclusively the Client stated above. There are no other authorized users of this report.

Intended Use – The intended use of this assignment is to assist the client in developing an offer to purchase the permanent and temporary construction easement rights of the subject properties.

Purpose of this Assignment – The purpose of this assignment is to provide a desk review of the appraisal report cited above, with emphasis placed on evaluating the clarity and logic of the analysis and conformance with USPAP and Institution requirements. The Scope of this assignment did not

include personal verification of market data or inspection of the subject property or any of the comparable properties.

Effective Date of Value – The effective date of value for this assignment is the same as the date of value in the appraisal report under review, as cited above.

Reviewer's Conclusions:	
Does the appraisal report substantially conform to USPAP?	**Yes**
Subject to the reviewer's comments which follow, is the reported value conclusion reasonable and well supported?	**Yes**
Reviewer's Recommendation:	
Category I - Accept the Appraisal Report as written.	**X**
Category II - Accept the Appraisal Report dated April 16, 2024. No further review required.	
Category III - Substantive changes are necessary prior to the report's acceptance. Additional review is required.	

In general, the update letter report is well-written as well as the appraisal report dated September 9, 2022. The conclusions regarding the market influences are properly supported. The subject is properly described in a complete analysis.

The market data utilized for the Sales Comparsion Approach to value appears to be comparable to the subject and properly analyzed. The reconciliation is adequate and properly supported. The addenda section includes all the relevant exhibits.

Overall, the appraisal dated April 16, 2024 is acceptable, with no major errors or omissions.

Special Assumptions and Limiting Conditions of this Appraisal Review

- This Appraisal Review is subject to each of the Assumptions and Limiting Conditions contained in the appraisal report under review, as well as any other specific items noted herein.

- Possession of this Appraisal Review Report, or a copy thereof, does not carry with it the right of publication.

- This Appraisal Review Report is intended exclusively for the internal use of the requesting client. No third party use of this report is authorized.

- The review appraiser, by reason of this Appraisal Review Report, is not required to give further consultation or testimony, or to be in attendance in court with reference to the property that is the subject of this Appraisal Review Report, unless arrangements have been previously made.

- This Appraisal Review Report should not be construed as an appraisal of the subject property.

- The analyses, opinions, and conclusions in this Appraisal Review Report are based solely on the data, analyses, and conclusions contained in the Appraisal Report under review, unless otherwise stated. It is assumed that these data are true and correct, and representative of existing market conditions. No attempt has been made to independently verify or to inspect the comparable market data presented in the Appraisal Report under review, or to obtain additional market data, unless otherwise stated.

Following this transmittal letter are a series of detailed questions considered in our review of the subject appraisal report, as well as supplemental comments for those items which required elaboration.

Significant issues identified during the review are summarized below in the following categories:

A. Issues with Potential for Significant Impact to Value
B. Issues with Potential for Marginal Impact to Value
C. Issues that Will Not Impact Value

Significant Issues Identified During the Review

A. Issues with Potential to Have a Significant Impact to Value

1. None.

B. Issues with Potential for Marginal Impact to Value

1. None.

C. Issues that Will Not Impact Value

1. None.

The following issues require further attention by the appraiser: None

Thank you for the opportunity to have been of service to you. If you have any questions regarding this appraisal review, please contact us.

Sincerely,

CURTIS - ROSENTHAL, Inc.



Joe J. Villegas, MAI
CA #AG004648



David M. Rosenthal, MAI, FRICS
CA #AG001641

REGULATORY COMPLIANCE	Yes	No	N/A
1. Was the appraiser directly engaged by the bank or another acceptable financial services institution?			X
2. Is a copy of the engagement letter in the appraisal report?			X
3. Does the appraiser state that the report conforms to the Uniform Standards of Professional Appraisal Practice (USPAP)?	X		
4. Was the appraisal performed by an appraiser licensed or certified in the state in which the property was located?	X		
5. Was the report completed by an appraiser with the appropriate certification or license: • Licensed – Non-Complex Residential up to $250,000 • Certified Residential – Complex or Non-Complex Residential up to $1,000,000 • Certified General – All property types	X		
6. Does the report state that the appraiser is competent to perform the assignment, or does the Appraiser's Statement of Qualifications indicate competence?	X		
7. If the appraiser stated he was not competent, does the report disclose what the appraiser did to achieve competency?			X
8. Is the appraisal report type stated, i.e., Appraisal Report or Restricted Report?	X		
9. Is the report written, and does it contain sufficient analysis that allows the reviewer to understand the data, analysis and conclusions reached?	X		
10. Are the applicable definitions of Market Value and other terms included?	X		
11. Does the appraiser analyze any current Agreement of Sale, option or listing of the property being appraised, including any impact on his value estimate (not just report the data)?			X
12. Does the appraiser analyze any Agreement of Sale, option or listing of the property being appraised during the last three years, including any impact on his value estimate (not just report the data)?			X
13. If the property is an income producing investment property, in whole or in part, does the appraiser analyze and report data on current lease revenues, vacancies, absorption, expenses and capitalization or discount rates?			X
14. Does the report analyze and report on current market conditions?	X		
15. Does the report analyze and report appropriate deductions and discounts for proposed construction or renovation, partially leased buildings, non-market lease terms, and tract developments with unsold units?			X
16. Does the report contain a certification in compliance with USPAP Standard 2 that includes a statement the assignment was not contingent on a specific value or loan approval?	X		
Comments: None			

GENERAL	Yes	No	N/A
1. Does the appraisal report state the identity of the client and any other intended users?	X		
2. Does the report include a statement of intended use of the appraisal?	X		
3. Does the report include a statement of property interest appraised?	X		
4. Does the report include a statement of type and definition of value and value source?	X		
5. Does the report include the date of the report and effective date of value(s) (e.g., prospective, current or retrospective)?	X		
6. Scope of work – Was the appropriate scope of work determined given the assignment?	X		
7. Scope of work - Is it adequately explained in the report?	X		
8. Are extraordinary assumptions and hypothetical conditions clearly and conspicuously stated?	X		
9. When extraordinary assumptions and hypothetical conditions were used, was it stated that their use may have affected the assignment results?	X		
10. Does the report include a signed certification?	X		
11. Does the certification meet USPAP Standards?	X		
12. Does the certification include name(s) of persons providing significant real property appraisal assistance?	X		
Comments: A hypothetical condition was used.			

NEIGHBORHOOD	Yes	No	N/A
1. Discuss factors that affect marketability	X		
2. Discuss neighborhood trends	X		
3. Neighborhood data and market analysis are integrated, or neighborhood data/analysis leads into the market analysis.	X		
4. Facts and statistics are analyzed in relation to the subject property and/or assignment.	X		
Comments: None.			

MARKET ANALYSIS	Yes	No	N/A
1. Discuss factors that affect marketability	X		
2. Discuss market area trends	X		
3. Facts and statistics are analyzed in relation to the subject property and/or assignment.	X		
Comments: None.			

SITE	Yes	No	N/A
1. Site adequately identified/defined	X		
2. Excess land identified/described			X
Comments: None.			

DESCRIPTION OF IMPROVEMENTS	Yes	No	N/A
1. Improvements adequately described			X
2. Description of relevant condition, depreciation and other pertinent issues.			X
3. Identification of personal property included in value			X
Comments: Not improved except with curbs, gutters, sidewalks and minimal landscaping.			

HIGHEST AND BEST USE (when the value opinion to be developed is Market Value)	Yes	No	N/A
1. Considered legally permissible and physically possible uses.	X		
2. Considered financially feasible uses, and identified maximally productive use	X		
3. Highest and Best Use of land provided (If land is valued as vacant or as if vacant)	X		
4. Highest and Best Use of improved property provided (if improved property is valued.) Consider demolition, continuation of the existing use, modification of the existing use as possibilities.	X		
5. Highest and Best Use of improved property as proposed provided (if improvements are proposed and valued as if proposed)			X
6. Provide a statement of the current use	X		
7. Appropriately address excess land			X
8. Appropriately address obsolescence			X
9. Appropriately address non-conforming or interim uses			X
10. Provide support and rationale for highest and best use opinion if purpose of assignment is market value	X		
Comments: None.			

COST APPROACH	Yes	No	N/A
1. All steps in the approach are reasonable			X
2. Depreciation and cost estimates are obtained from market information			X
3. The calculations are correct			X
4. Depreciation items are consistent with descriptions			X
5. Depreciation is handled appropriately			X
6. Excess land handled appropriately			X
7. Value appropriately identified			X
8. Exclusion of cost approach supported			X
Comments: None.			

SALES COMPARISON APPROACH	Yes	No	N/A
1. Comparable selection is reasonable	X		
2. Adjustments are consistent and reasonable	X		
3. Adequate reasoning is provided for adjustments, analysis, opinions, conclusions	X		
4. Excess land appropriately analyzed			X
5. Obsolescence appropriately analyzed			X
6. Non-conforming or interim uses appropriately analyzed			X
7. Sales adequately reconciled	X		
8. Value appropriately identified	X		
9. Exclusion of sales comparison approach supported			X
Comments: None.			

INCOME APPROACH	Yes	No	N/A
1. Data selection is reasonable			X
2. Reasonable market support for income, expenses, vacancy			X
3. Reasonable market support for capitalization rate	X		
4. Excess land appropriately analyzed			X
5. Obsolescence appropriately analyzed			X
6. Non-conforming or interim uses appropriately analyzed			X
7. Appropriate choice of methodology for property type	X		
8. Value appropriately identified	X		
9. Exclusion of income approach supported.			X
Comments: None.			

PROPOSED CONSTRUCTION	Yes	No	N/A
1. Valuation is as of a prospective date and is based on an extraordinary assumption that construction is complete, or valuation is as of a current date is and is based on a hypothetical condition that the construction is complete			X
2. Prospective value reported appropriately			X
3. Market support is provided for time of completion, absorption, costs, income and expenses			X
4. Effective date of the appraisal and the date of the report are stated clearly			X
5. Appropriate hypothetical conditions and/or extraordinary assumptions and/or limiting conditions included			X
Comments: None			

FINAL RECONCILIATION	Yes	No	N/A
1. Reconcile quality and quantity of data available and analyzed within the approaches used	X		
2. Reconcile the applicability or suitability of the approaches used to arrive at the value conclusions	X		
Comments: The reconciliation is satisfactory.			

REVIEWER'S CERTIFICATION

I certify that to the best of my knowledge and belief:

The statements of fact contained in this report are true and correct.

The report analyses, opinions, and conclusions are limited only by the reported assumptions and limiting conditions, and are my personal, impartial, and unbiased professional analyses, opinions, and conclusions.

I have no present or prospective interest in the property that is the subject of this report and no personal interest with respect to the parties involved.

I have no bias with respect to the property that is the subject of this report or to the parties involved with this assignment.

Our engagement in this assignment was not contingent upon developing or reporting predetermined results.

Our compensation for completing this assignment is not contingent upon the development or reporting of a predetermined value or direction in value that favors the cause of the client, the amount of the value opinion, the attainment of a stipulated result, or the occurrence of a subsequent event directly related to the intended use of this appraisal.

Our analyses, opinions, and conclusions were developed, and this report has been prepared in conformity with the Uniform Standards of Professional Appraisal Practice and in conformity with the requirements of the Code of Professional Ethics and the Standards of Professional Practice of the Appraisal Institute.

Joe Villegas and David Rosenthal have not made a personal inspection of the subject property.

No one has provided significant real property appraisal assistance to the person signing this certification.

Disclosure of the contents of this appraisal report is governed by the Bylaws and Regulations of the Appraisal Institute. In furtherance of the aims of the Institute to Members, we may be required to submit to authorized committees of said Institute, copies of this report and any subsequent changes or modifications thereof.

This assignment was not based on a requested minimum value, a specific valuation, or the approval of a loan.

We have not provided any services regarding the subject property within the prior three years, as an appraiser or in any other capacity.

Respectfully submitted,

CURTIS-ROSENTHAL, INC.

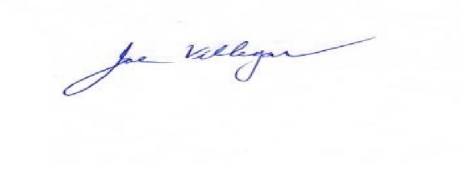

Joe J. Villegas, MAI
CA #AG004648



David M. Rosenthal, MAI, FRICS
CA #AG001641

Professional Qualifications of DAVID M. ROSENTHAL, MAI, FRICS

PROFESSIONAL DESIGNATIONS

Appraisal Institute
MAI Member, Appraisal Institute (MAI #8024)
Member of the Regional Ethics & Counseling Panel, 1994-1997, 2000-2003

Fellow of the Royal Institution of Chartered Surveyors
FRICS Member

State of California, Office of Real Estate Appraisers
Certified General Real Estate Appraiser (#AG001641)

EDUCATION

Master of Management Degree (MBA), 1980
J.L. Kellogg Graduate School of Management, Northwestern University, Evanston, Illinois - Concentrations in Finance and Accounting

Bachelor of Science Degree, 1978
University of Florida, Gainesville, Florida
Major in Business Administration - concentration in Finance

EXPERIENCE

CURTIS - ROSENTHAL, Inc., 1983 to present – President & CEO
Founding principal of regional commercial real estate appraisal and consulting firm. Perform field appraisals and review appraisals for: Commercial Mortgage Lenders (CMBS, Life Insurance Companies, Banks, Pension Funds), Public Agencies (City Governments, Redevelopment Agencies, Transit Agencies), Law Firms (Real Estate Litigation, Estate Planning, Lease Negotiation), Corporations (Valuation for Financial Reporting), and Accounting Firms. Properties appraised include: retail, office, industrial, apartments, condominiums, mixed-use, special purpose, and vacant land. Areas of experience include southern and northern California, Arizona and Nevada.

Security Pacific National Bank, 1981-1982 - Corporate Loan Officer
Responsible for portfolio of loans consisting primarily of real estate companies. Projects financed included construction and renovation of income properties and development of new residential tracts.

EXPERT WITNESS

Accepted as an expert witness in the following courts:
Federal Bankruptcy Court - California Central District

Superior Court - Los Angeles County, and Orange County
Municipal Court - Orange County

INSTRUCTOR

University of California at Los Angeles, 1988
UCLA Extension, Financial Institutions Management Program - Guest Lecturer

Loyola Marymount University, 1987 - 2014
College of Business Administration, Finance Department - Guest Lecturer

Professional Qualifications of **DAVID M. ROSENTHAL, MAI, FRICS** (Cont'd)

PROFESSIONAL AFFILIATIONS

California Bankers Association
California Mortgage Bankers Association (CMBA), Affiliate Member
Organizing Committee for Commercial Real Estate Finance Conference, 2003 – 2009
Organizing Committee for Deal Makers Forum, 2003, 2005, 2007
Entrepreneurs Organization (EO, formerly YEO/WEO)
Los Angeles Mortgage Association (LAMA), Co-Founder, Co-Chair 2000 – present
Southern California Real Estate Alliance (SCREA), Co-Chair 1995-1996, 2003
International Council of Shopping Centers (ICSC)
Western Real Estate Business Magazine, Editorial Advisory Board
Western Independent Bankers

SPEAKING ENGAGEMENTS

Appraisal Institute
Western Regional Conference, Seminar Moderator 1996-1999
SF Bay Area Fall Conference, Seminar Moderator 1998
LA Westside Group, Speaker April 2004
California Bankers Association
Chief Credit Officers Symposium, Speaker 2008
Annual Conference, Speaker 2009
California Mortgage Bankers Association
Commercial Real Estate Finance Conference, Seminar Moderator 2003-2009
Deal Makers Conference, Seminar Moderator 2003, 2007; Seminar Panelist 2005
California CPA Education Foundation
Seminar Speaker 1998
Crittenden National Conference
Seminar Panelist, 2009
Institute of Management Accountants
Seminar Speaker 1997
International Right of Way Association, IRWA/AI Joint Conference
Seminar Moderator 2002
National Council of Real Estate Investment Fiduciaries, National Conference
Seminar Moderator 2005
Southern California Developers Forum
Seminar Panelist 2004
Western Independent Bankers
Troubled Asset Forum, Speaker, 2009

PUBLICATIONS

California Real Estate Journal
"Telling the Story – A Solutions Approach to Appraisal", September 2003
Real Estate News Television (RENTV.com)
"Economic Update", Regular Column 2002 to present
Real Estate Southern California
"When Will Things Get Better?", September 2008
"What Happened to CMBS?", September 2007
"The ABC's of CDO's", September 2006
"The CMBS Market Comes of Age", March 2006
"Real Estate Cycles – A Long Term Perspective", September 2005
"Invest in Your Relationships", September 2004
Western Real Estate Business
"Orange County Industrial Market Update, Q1 2006", April 2006

EDUCATION

Bachelor of Arts Degree, 1974
California State University, Fullerton, Fullerton, California
Major in Art and History

PROFESSIONAL DESIGNATIONS

Appraisal Institute No. 9196
MAI Member

State of California, Bureau of Real Estate Appraisers
Certified General Real Estate Appraiser (#AG004648)

State of California, Real Estate Broker
(License # 00380118)

International Right of Way Association
Member and Past President of Inland Empire Chapter 57

EXPERIENCE

CURTIS - ROSENTHAL, Inc., 2016 to date – Regional Manager Inland Empire
Perform field appraisals, and review appraisals for public and private sector clients. Properties appraised include: residential, apartments, commercial, industrial, special purpose, vacant land and part takes.

Villegas Appraisal Co., -1987-2015 Real Estate Appraiser
Responsible for the appraisal of retail shopping centers, office buildings, restaurants, motels, apartment complexes, cold storage facilities, mixed use commercial projects and residential subdivisions. Completed hundreds of appraisal assignments for public and private sector clients throughout Southern California. Experience includes providing reviews of commercial and residential appraisal reports for the banking industry. Extensive experience providing expert witness services including deposition and trial testimony.

EXPERT WITNESS

Accepted as an expert witness in Los Angeles County Superior Court and Orange County.

PROJECT EXPERIENCE

- California High-Speed Rail Authority, First Construction Section, Fresno County, CA
- De Anza Boulevard Realignment Project, City of Calexico, CA
- Caltrans, Region 7, 710 Freeway Corridor Project, Cities of South Pasadena, Pasadena and Los Angeles, CA
- Southern California Gas Company Pipe Line Upgrade Project, San Luis Obispo County and City of Pismo Beach,
  CA
- Southern California Gas Company Pipe Line Upgrade Project, Kings County, CA
- Yucaipa Boulevard Widening Project, City of Yucaipa
- Palm Canyon Drive Widening Project, City of Palm Springs
- Alder Avenue Widening Project, City of Rialto
- Avenue E Roundabout Project, City of Yucaipa
- Renaissance Parkway Project, City of Rialto

- Former Youth Correction Facility, Paso Robles for the CA Department of General Services
- Partial Fee Acquisition projects for Los Angeles County Metropolitan Transportation Authority

Jeremy Bagott, MAI, AI-GRS
Real Property Appraiser
2674 East Main Street, E-504
Ventura, CA 93003
Tel: 805-794-0555
Email: jbagott@gmail.com

April 16, 2024

Las Virgenes Municipal Water District
c/o Heather Johnson
Senior Associate / Project Manager
Hamner Jewell & Associates
530 Paulding Circle, Suite A
Arroyo Grande, CA 93420

Re: LVMWD - Twin Lakes Pump Station Pipeline - City of Los Angeles Easement Update
Appraisal Report – Update Letter
City of Los Angeles Property
Germain Street, Chatsworth, California
APNs: 2723-009-903 and -010-904

Dear Ms. Johnson,

This update incorporates by reference the report titled "Appraisal Report for Twin Lakes Pump Station Pipeline and Temporary Easement Appraisal, Chatsworth Park North and South" prepared for Las Virgenes Municipal Water District.

Appraisers may perform a recertification of value to confirm whether or not the conditions of a prior appraisal have been met. However, if a client wishes to know whether the value of a property has changed (or remained the same) since a prior appraisal, which is the case here, this is an update.

Regardless of the label used, an appraisal of a property that was the subject of a prior assignment is not an extension of the prior assignment, but rather it is a new appraisal assignment.

There are no restrictions in the Uniform Standards of Professional Appraisal Practice on what length of time may have elapsed between the prior and current assignments. For all assignments, the development of the assignment results must be in accordance with the requirements contained in the applicable standard. Rather than duplicating steps in the appraisal process, the appraiser can elect to incorporate some of the analyses from the previous assignment by reference or through an extraordinary assumption, which is done here. The new report is not required to have the same level of

detail as the original report. However, the new report must contain sufficient information to be meaningful and not misleading to the intended users. There are three ways in which the reporting requirements can be satisfied for these types of assignments:

1. Provide a new report that contains all necessary information/analysis to satisfy the applicable reporting requirements without incorporation of the prior report by attachment or reference;
2. Provide a new report that incorporates by attachment specified information/analysis from the prior report;
3. Provide a new report that incorporates by reference specified information/analysis from the prior report so that, in combination, the referenced portions and the new information/analysis added satisfies the applicable reporting requirements. When this option is used, the items from the prior report should be specifically identified in the new report to avoid being misleading.

The third option was used here. Below are a number of key identifiers and the scope of work in the update, along with an overview of the appraiser's analysis and rationale.

Subject Property: The subject is described briefly below. It is described in greater detail in the report incorporated by reference in the chapter "Determination of the Larger Parcel" on Page 28 and in the chapter "Larger Parcel Description" beginning on Page 35 in in the report incorporated by reference.

Project	Twin Lakes Pump Station Pipeline
Assessor's Parcel (Larger Parcel)	2723-009-903 and 2723-010-904
Owner	City of Los Angeles (per LandVision)
Property Location	North Side of Germain Street and west of Germain Street, Chatsworth, CA 91311
Applicable Zoning	OS-1XL, Open-Space with Extra-Low Height District
Use as of Effective Date of Value	City Park
Appraised Use	Vacant land (for purposes of easement valuation)
Highest and Best Use of the Subject (As Vacant)	Open-space use, such as land that might be used in so-called land-banking, conservancy or for open-space mitigation use
Total Land Area (Larger Parcel)	14.63± Acres (637,283± SF) 74.75± Acres (3,256,110± SF) 89.38± Acres (3,893,393± SF)
Property to be Appraised	Larger parcel (land only) and easement acquisitions
Improvements to be Acquired	None

Client and any other intended users: The client in this updated assignment is the Las Virgenes Municipal Water District. An additional intended user is Hamner, Jewell & Associates. This is unchanged from the report incorporated by reference.

Intended use: The intended use is to assist the client in developing an offer to purchase the aforementioned rights.

Appraiser: Jeremy Bagott, MAI, AI-GRS (unchanged)

Effective date of value: The appraiser's most recent visit to the larger parcel was on February 26, 2024. It appeared largely unchanged from its state in August 2022. This update assignment, which incorporates the original report by reference, revises the date of value to April 16, 2024. It is an extraordinary assumption in this scope of work that the state of the subject larger parcel is materially unchanged from its state in late February 2024, when the appraiser last visited.

Date of report: The original report incorporated by reference is dated September 9, 2022, and has an effective date of value of August 18, 2022. The date of this update report can be found on the first page of this document.

Interest appraised: Fee Simple Interest (Undivided Fee Rule). This remains unchanged.

Updated Market Overview:

The larger parcel in the above-referenced report is zoned as open space. As open-space parcels sell only infrequently, the appraiser looked at the general housing market as a bellwether for rural residential land.

Housing, which is a key segment of the national economy, appears very weak right now, based on a recent report by the National Association of Home Builders. It is in a state of stagnation.

Residential real estate is a key component of the American economy. Housing activity contributes between 15% to 18% of gross domestic product. A slowdown in this sector can depress the rest of the economy. A decline in home building and buying has led to every recession since the end of the Second World War, according to the NAHB. The association's latest report indicates that buyers and builders are both pulling back from the market yet again, which could be a leading indicator for another recession on the horizon.

On the demand front, potential homebuyers have receded from the market. Existing home sales have slid. Meanwhile, borrowing capacity has been curtailed by rising interest rates. The average mortgage rate has accelerated at the fastest pace in 35 years. These factors have effectively destroyed demand.

Properties are staying on the market longer. Mortgage rates are soaring. Homes are no longer selling for more than the asking price. Contingencies are no longer being waived, reports the Los Angeles Times. When interest rates first soared in 2022, buyers backed away en masse, inventory swelled and home prices dropped. Then potential sellers all but went on strike, with many deciding they didn't want to move and trade their sub-3% mortgages for a loan at more than double that rate.

According to the Times, Southern California home prices have been creeping up again, hitting a record in March 2024, even amid sky-high mortgage interest rates, a combination that is not sustainable.

In the appraiser's opinion, given the mix throughout 2023 and into the first quarter 2024, the residential market has largely stagnated given these headwinds. Many brokers have echoed these sentiments, describing a much-diminished market in the number of sales, a market that is largely going sideways in terms of any appreciation.

Land sales under the categories of "vacant land," "vacant residential land" and "agricultural land" were researched with a focus on rural residential land and open-space land. Development and speculative land at the edge of urban development were examined but discarded. The land sales were focused on the north San Fernando Valley and its outskirts, as well as in parts of East Ventura County. Sales examined were between 5 acres and 150 acres.

Based on the examination of these sales – more details of which are retained in the appraiser's work file – it is the appraiser's opinion that the market for extremely low-density land has not materially changed and no change to the value is warranted.

Assignment Results: The value of the larger parcel and the proposed acquisitions, which can be found on Pages 2-3 and Page 79 of the referenced report, remain unchanged.

Jeremy Bagott, MAI, AI-GRS
Certified General Real Estate Appraiser
California Certificate No. AG031250

HAMNER & JEWELL ASSOCIATES
Government Real Estate Services

APPRAISAL REPORT FOR
TWIN LAKES PUMP STATION PIPELINE
PIPELINE AND TEMPORARY EASEMENT APPRAISAL
CHATSWORTH PARK NORTH AND SOUTH

PREPARED FOR
LAS VIRGENES MUNICIPAL WATER DISTRICT



SUBMITTED BY
HAMNER, JEWELL & ASSOCIATES
Jeremy Bagott, MAI, AI-GRS
Appraisal Manager

PHONE (805) 658-8844

jbagott@hamner-jewell.com

WWW.HAMNER-JEWELL.COM

HAMNER JEWELL & ASSOCIATES
Government Real Estate Services

September 9, 2022

Las Virgenes Municipal Water District
c/o Heather Johnson
Hamner, Jewell & Associates
530 Paulding Circle, Suite A
Arroyo Grande, CA 93420

Re: Twin Lakes Pump Station Pipeline
Pipeline and Temporary Easement Appraisal
Chatsworth Park North and South
APNs: 2723-009-903 and 2723-010-904

Dear Ms. Johnson,

I have completed the appraisal of rights relating to the above-referenced property for a proposed project.

The accompanying Appraisal Report presents the data, analyses and rationale used in the appraisal process to arrive at the appraiser's opinion of value. The level of discussion contained in this report is relevant to the needs of the client and of the assignment's intended use. The report presents the descriptive and factual data, the assumptions and conditions affecting the appraisal, and the findings and analyses that lead to and support my opinion of value. I am not responsible for unauthorized use of this report. Every effort has been made to conform to the Standards of Professional Practice of the Appraisal Institute, which fully incorporate the Uniform Standards of Professional Appraisal Practice. I have also intended to comply with applicable laws. The undersigned conducted the appraisal and prepared the report.

The client and any additional intended users should be aware that the California Bureau of Real Estate Appraisers has not submitted the "2020-2021 Uniform Standards of Professional Appraisal Practice" to a required notice-and-comment rulemaking pursuant to the procedures and standards set forth in California's Administrative Procedure Act (Government Code § 11340 et

seq.). In addition, 1 CCR § 20 requires documents incorporated by reference into a state regulation "be incorporated by title and date of publication or issuance." This has not been done. Absent a required rulemaking, the "2020-2021 Uniform Standards of Professional Appraisal Practice" are not recognized by the State of California and are likely not enforceable in the state.

This letter of transmittal is considered part of the attached report and must not be separated from the report. The date of this letter is considered the report date.

I thank you for this opportunity to provide you with professional appraisal services.

Jeremy Bagott, MAI, AI-GRS
Appraisal Manager
Certified General Real Estate Appraiser
California Certificate No. AG031250
Hamner, Jewell & Associates
260 Maple Court, Suite 277
Ventura, CA 93003
Phone: (805) 658-8844

Contents

KEY FACTS AND FINDINGS 1
INTRODUCTION 4
COUNTY OVERVIEW 12
CITY OVERVIEW 23
NEIGHBORHOOD OVERVIEW 26
MARKET OVERVIEW 27
DETERMINATION OF LARGER PARCEL 28
LARGER PARCEL DESCRIPTION 35
PROJECT DESCRIPTION AND PROPOSED ACQUISITIONS 40
HIGHEST AND BEST USE ANALYSIS 65
VALUATION 67
APPRAISER CERTIFICATIONS 80
ADDENDUM 82

KEY FACTS AND FINDINGS

Project	Twin Lakes Pump Station Pipeline
Assessor's Parcel (Larger Parcel)	2723-009-903 and 2723-010-904
Owner	City of Los Angeles (per LandVision)
Property Location	North Side of Germain Street and west of Germain Street, Chatsworth, CA 91311
Applicable Zoning	OS-1XL, Open-Space with Extra-Low Height District
Use as of Effective Date of Value	City Park
Appraised Use	Vacant land (for purposes of easement valuation)
Interest Appraised	Fee Simple (Undivided Fee Rule)
Highest and Best Use of the Subject (As Vacant)	Open-space use, such as land that might be used in so-called land-banking, conservancy or for open-space mitigation use
Effective Date of Value	August 18, 2022
Date of Inspection	August 18, 2022
Total Land Area (Larger Parcel)	14.63± Acres (637,283± SF) 74.75± Acres (3,256,110± SF) 89.38± Acres (3,893,393± SF)
Property to be Appraised	Larger parcel (land only) and easement acquisitions
Improvements to be Acquired	None

Basis of the Appraisal

The three accepted approaches to value are the sales comparison approach, the income approach and the cost approach.

The sales comparison approach is a method that compares the property being appraised with similar properties that have sold within a relevant time frame. It involves making qualitative or quantitative comparisons to the subject and then applying units of comparison to indicate a value for the larger parcel. The approach is the most common and preferred method when an adequate supply of comparable sales is available. The sales comparables indicated a bracketed value range and are provided below:

Sale No.	Subject Value Less Than/ Greater Than	Sale Price Per Square Foot
LS-1	<	$1.33
LS-3	<	$1.10
LS-2	<	$0.43
Subject bracketed value range is from $0.31 to $0.43 per square foot		
LS-4	>	$0.31

Competitive properties were compared based on a unit of comparison that is consistent with market practices.

The income approach converts a property's anticipated benefits into a value. Typically, the annual net income is capitalized at a market-derived capitalization rate to provide an indication of value. The income approach is most often used for income-producing properties or real estate acquired as an investment. The income approach is not considered applicable to this appraisal assignment, as vacant land doesn't typically lend itself to capitalization methods.

The cost approach is used to derive a value by estimating the current cost to construct a replacement/reproduction of the existing structure(s), deducting depreciation and adding land value. It is most often used when valuing properties with new or relatively new improvements and special-use properties. The cost approach is not relevant for vacant land.

VALUE OF THE LARGER PARCEL PER SQUARE FOOT (LAND ONLY)

= $ $0.35

VALUE OF THE LARGER PARCEL (LAND ONLY)

3,893,393 SF X $0.35/SF = $ 1,362,688

VALUE OF THE PERMANENT ACQUISITIONS

Land Acquisition:

Easement Acquisition A-5			
14,219 SF X $0.35/SF X 40% (Unencumbered)	=	$	1,991
2,123 SF X $0.35/SF X 60% X 40% (Previously encumbered)	=	$	178
Easement Acquisition A-1			
1,981 SF X $0.35/SF X 40% (Unencumbered)	=	$	277
	=	$	
Easement Acquisition A-19			
16,314 SF X $0.35/SF X 40% (Unencumbered)	=	$	2,284
14,054 SF X $0.35/SF X 60% X 40% (Previously encumbered)	=	$	1,181
Total			**5,911**

FAIR MARKET VALUE (AS OF AUGUST 18, 2022)

Market Value of Proposed Acquisitions		
Land	$	5,911
Improvements	$	0
Net Severance Damages		0
Temporary Construction Easement	$	555
Total	**$**	**6,466**
Rounded	**$**	**6,500**

INTRODUCTION

CLIENT, INTENDED USE, INTENDED USER

The client is the Las Virgenes Municipal Water District. An additional intended user is Hamner, Jewell & Associates. The purpose of the engagement is for the appraiser to determine a fair-market value for the acquisition of easements. The intended use is to assist the client in developing an offer to purchase the aforementioned rights.

PROPERTY IDENTIFICATIONS

The larger parcel and rights appraised are described in several sections of this report.

SCOPE OF WORK

This appraisal report relates to the property affected by the aforementioned proposed project. Unless otherwise stated, the date to which the opinions of value apply is the date of inspection for the larger parcel identified herein. The opinions of value are stated in terms of cash, or terms equivalent to cash. The scope of work involved is summarized as follows:

- Inspection of the subject property and neighborhood.
- Assembling, screening and analysis of data relating to the subject property and the market area.
- Research of the subject's region, community and neighborhood to determine market influences.
- Research public records to confirm information about the subject and comparable sales to help ensure they are factually correct and to identify any terms or atypical influences that affect price or value.
- Determination of relevant valuation methods.
- Research of sales, listings, and offers to purchase involving properties considered competitive with the subject property within the subject's market area or competing market areas.
- Interview with market participants, to the extent possible.
- Analysis of each comparable in comparison with the subject to infer appropriate value.
- The valuation of the property involved an investigation and analysis of the improvement areas, as well as the entire regional area, for social, economic, governmental, and environmental forces and trends that affect or could influence property values. Listed below are some of the contacts, documents and information sources used in preparation of the report.

    1) Examination of public records from pertinent government agencies, such as the county assessor's office, planning department and tax collector's office.

    2) Review of pertinent flood and seismic information.

3) Study of proposed project acquisitions, whether temporary or permanent, in such form as plats, legal descriptions, plans and sketches.

4) Research of zoning and general plan land-use designations obtained from the planning departments and websites for applicable cities, counties or both.

5) Research of events such as sales, listings, offers and option signings during a period five years preceding the effective date of value for each subject property.

Market participants were interviewed to glean information about sales of competing properties and supply-and-demand issues in the local market.

Sales of comparable properties were verified with participants directly involved in, or knowledgeable about, the transaction unless otherwise noted. Sales, listings, expired listings and pending sales were sought and, if found to be relevant, considered in this analysis, with primary reliance placed on closed sales.

RIGHT-OF-WAY APPRAISALS

Appraisals for public acquisitions involve acquiring fee title or easement rights from an owner.

PARTIAL ACQUISITION INTEREST ANALYSIS

The partial acquisition, also known as "partial-fee acquisition," starts with an estimate of fair market value for the "undivided fee" interest of the larger parcel using the most applicable method for valuing similar properties.

Once the larger parcel value is estimated, the following partial acquisition appraisal methodology is utilized:

- Value the part acquired.

- Value of the remainder parcel as part of the larger parcel, which is the value of the remainder before consideration of damages or benefits.

- Value the remainder parcel, after the proposed acquisition and before consideration of benefits. This identifies severance damages due to the acquisition, consisting of a potential loss of market value (by comparing to value of the remainder as part of the larger parcel) and cost to cure damages are estimated where applicable.

- Value the remainder parcel, after the acquisition, considering benefits. This identifies benefits, consisting of a potential gain in market value due to the acquisition (by comparing to value of the remainder as part of the larger parcel).

- The value of the acquisition is the value of the part acquired plus net severance damages as California law allows benefits to only offset severance damages.

FULL-INTEREST ANALYSIS

The full-interest analysis is the acquisition of all property rights using the applicable valuation methodology.

SPECIAL ASSIGNMENT CONDITIONS

None

DEFINITIONS USED IN THE REPORT

Fair Market Value

(a) The fair market value of the property taken is the highest price on the date of valuation that would be agreed to by a seller, being willing to sell but under no particular or urgent necessity for so doing, nor obliged to sell, and a buyer, being ready, willing, and able to buy but under no particular necessity for so doing, each dealing with the other with full knowledge of all the uses and purposes for which the property is reasonably adaptable and available.

(b) The fair market value of property taken for which there is no relevant, comparable market is its value on the date of valuation as determined by any method of valuation that is just and equitable.

The Code goes on to say that:

The fair market value of the property taken shall not include any increase or decrease in the value of the property that is attributable to any of the following:

A) The project for which the property is taken.

B) The eminent domain proceeding in which the property is taken.

C) Any preliminary actions of the plaintiff relating to the taking of the property.

Source: Section 1263.320 of the California Code of Civil Procedure

Compensation for Property Taken
Compensation shall be awarded for the property taken. The measure of this compensation is the fair market value of the property taken.

Source: Section 1263.310 of the California Code of Civil Procedure

Larger Parcel

In governmental land acquisitions and in valuation of charitable donations of partial interests in property such as easements, the tract or tracts of land that are under the beneficial control of a single individual or entity and have the same, or an integrated, highest and best use. Elements for consideration by the appraiser in making a determination in this regard are contiguity, or proximity, as it bears on the highest and best use of the property, unity of ownership, and unity of highest and best use. In most states, unity of ownership, contiguity, and unity of use are the three conditions that establish the larger parcel for the

consideration of severance damages. In federal and some state cases, however, contiguity is sometimes subordinated to unitary use.

Source: The Dictionary of Real Estate Appraisal, Appraisal Institute, 6th Edition P. 127

Damage to Remainder

Damage to the remainder is the damage, if any, caused to the remainder by either or both of the following:

(a) The severance of the remainder from the part taken.

(b) The construction and use of the project for which the property is taken in the manner proposed by the plaintiff whether or not the damage is caused by a portion of the project located on the part taken.

Source: Section 1263.420 of the Code of Civil Procedure

Benefit to Remainder

Benefit to the remainder is the benefit, if any, caused by the construction and use of the project for which the property is taken in the manner proposed by the plaintiff whether or not the benefit is caused by a portion of the project located on the part taken.

Source: Section 1263.430 of the Code of Civil Procedure

Hypothetical Condition

A condition, directly related to a specific assignment, which is contrary to what is known by the appraiser to exist on the effective date of the assignment results but is used for the purpose of analysis.

Source: Uniform Standards of Professional Appraisal Practice 2018-2019 Edition, P. 4

PROPERTY RIGHTS DEFINED

Fee Simple Estate

Absolute ownership unencumbered by any other interest or estate, subject only to the limitations imposed by the governmental powers of taxation, eminent domain, police power, and escheat.

Source: The Dictionary of Real Estate Appraisal, Appraisal Institute, 6th Edition, P. 90

Easement

The right to use another's land for a stated purpose. Access or right-of-way easements may be acquired by private parties or public utilities. Governments may be the beneficiaries of easements placed on privately owned land that is dedicated to conservation, open space, or preservation.

Source: The Appraisal of Real Estate (14th Edition), Appraisal Institute, Chicago, Illinois, 2013, P. 75

Temporary Easement

An easement granted for a specific purpose and applicable for a specific time period. A construction easement, for example, is terminated after the construction of the improvement and the unencumbered fee interest in the land reverts to the owner.

Source: The Dictionary of Real Estate Appraisal, Appraisal Institute, 6th Edition P. 231

Noncompensable Damages

The following types of damages have been found by the courts not to be compensable, or in certain respects, may be compensable only under laws other than those of eminent domain. Therefore, the following noncompensable damages should generally not be included in real property acquisition valuations:

- Damages to business
- Expenses for moving personal property
- Temporary damage to the use and occupancy of property reasonably incident to construction requirements
- Damages due to annoyance and inconveniences suffered by the public in general
- Circuity of travel caused by dividing a highway
- Rerouting or diversion of traffic or changing of a two-way street to a one-way street; and
- In general, all those types of damages that can be considered to be conjectural, speculative and remote.

Source: Caltrans Appraisal Policies and General Requirements, 3B7.09.03.00

Undivided Fee Rule

A condemnor generally instructs its appraiser to value the property as if the title were held by a single entity. This procedure has won court approval and is often referred to as the "unit rule" or the "undivided fee rule." The rule requires valuing property as a whole rather than by the sum of the values of the various interests into which it may have been carved, such as lessor and lessee, life tenant and remainderman, etc. This is an application of the principle that it is the property, not the various titles, which is being taken.

Source: Real Estate Valuation in Litigation, 2nd Edition.

GENERAL ASSUMPTIONS AND LIMITING CONDITIONS

This report and the value opinions herein are subject to the following assumptions and limiting conditions.

1. The appraiser assumes title to the property is marketable and in good order.

2. The appraiser assumes the appraised property is competently managed.

3. The appraiser assumes that data, maps, and descriptive materials provided by the client or other consultants and their representatives are accurate and correct.

4. The appraiser does not assume any responsibility for matters of law or legal interpretation. The appraiser is not an attorney at law.

5. The appraiser assumes property boundaries, as portrayed in exhibits or other materials provided by the client, or as they appear on the ground, are correct. Unless otherwise stated, the appraiser has not commissioned any surveys of the property.

6. The appraisal is made based on the premise that there are no encumbrances prohibiting utilization of the property under the appraiser's estimate of highest and best use.

7. The appraiser shall not be required to give testimony or appear in court by reason of this appraisal with reference to the property described in this report unless prior arrangements are made.

8. The report is to be considered in its entirety and use of only a portion will invalidate the appraisal.

9. The valuation is based on information from sources believed reliable, and the appraiser assumes that such information is correct and accurately reported.

10. Possession of this report does not carry with it the right of publication. No part of it may be reproduced by any means nor disseminated to the public in any way without the prior written consent of the appraiser. Nor may it be used for any purpose or function other than those stated in the report, or by anyone other than the client without the prior written consent of the appraiser. Such consent will only be granted subject to proper qualifications and arrangements, possibly including the payment of an additional fee.

11. The report is subject to review by duly authorized representatives of the Appraisal Institute for the purpose of upholding ethics and standards. This means that the appraisers must supply a copy of the report to the Appraisal Institute, if requested.

12. It is not the intention of the appraisers or the appraisal firm to assume any liability with regard to this appraisal from any user other than the client. Any person or entity that obtains or reads this report, other than the client, expressly assumes all risk of damages to himself or third persons arising out of reliance on this report, and waives the right to bring any action based on the appraisal. Neither the appraiser, nor Hamner, Jewell & Associates, shall have any liability to any such person or entity.

13. Neither the appraiser nor the appraisal firm shall be in any way responsible for any costs incurred to discover or correct any physical, financial, and/or legal deficiencies of any type present in the subject property.

14. Any value estimates contained herein are subject to the purpose, date, and definition of value stated in the report.

15. No responsibility is assumed for building permits, zone changes, engineering, or any other services or duty connected with legally utilizing the subject property.

16. Unless otherwise stated in this report, the appraiser observed no signs of hazardous compounds at the property, but it should be noted that the appraiser is not qualified to detect such substances. Except as where it may be discussed in the report, the appraiser has no knowledge of the existence of such materials on or in the property. The existence of substances such as volatile organic compounds, asbestos, polychlorinated biphenyls or other potentially hazardous materials may significantly affect the value of a property. The appraisal assumes there is no such material on or in the property that would bring about a loss in value. The appraiser recommends the client consult a professional in such matters.

17. It is assumed that any conditions that would affect the use and value of the property are discoverable through normal investigation.

18. The Americans with Disabilities Act (ADA) became effective January 26, 1992. The appraiser has not made a specific compliance survey and /or analysis of this property to determine whether it is in conformity with the various detailed requirements of the ADA. It is possible that a compliance survey of the property together with a detailed analysis of the requirements of the ADA could reveal that the property does not comply with one or more elements of the ADA. If so, this fact could have a negative effect upon the value of the property. Since the appraiser has no direct evidence relating to this issue, the appraiser did not consider possible noncompliance with the requirements of the ADA in estimating the value of the subject property. Unless otherwise noted in this appraisal, it is assumed that the property appraised is not substantially impacted by this law. The appraiser is not an expert in ADA matters.

EXTRAORDINARY ASSUMPTIONS

This report and its value conclusions are expressly subject to the following extraordinary assumptions. The use of an extraordinary assumption can affect the results of an appraisal.

1. Project-specific information provided by the client and its agents/contractors was relied upon. In these appraisals, we assume that this information is accurate and complete.

HYPOTHETICAL CONDITIONS

This report and the value conclusions it contains is expressly subject to the following hypothetical conditions. The use of a hypothetical condition can affect the results of an appraisal.

1. The fair market value of the property taken shall not include any increase or decrease in the value of the property that is attributable to any of the following: 1) the project for which the property is taken: 2) the eminent domain proceeding in which the property is taken; and 3) any preliminary actions of the plaintiff relating to the taking of the property (California Code

of Civil Procedure, Section 1263.330). Therefore, the fair market value of the larger parcel assumes the property is appraised as if there is no project.

2. The valuation of the subject property, in the condition after the partial acquisition and the construction and use of the proposed project, is based on a hypothetical condition the project has been completed.

COUNTY OVERVIEW

OVERVIEW OF LOS ANGELES COUNTY

Los Angeles County is the most populous county in the United States and in California, with 10,014,009 residents estimated as of 2020. At 4,061 square miles of land and with 88 incorporated cities and many unincorporated areas, it is home to more than one-quarter of California residents. Its county seat, Los Angeles, is also California's most populous city and the second most populous city in the United States, with about 4 million residents.

PHYSICAL/GEOGRAPHIC ATTRIBUTES

Los Angeles County encompasses 4,061 square miles of land area. It contains 70 miles of coast on the Pacific Ocean and many landscapes including mountain ranges, valleys, forests, islands, lakes, rivers, and desert. The main mountain ranges are the Santa Monica Mountains and the San Gabriel Mountains. It also includes the westernmost portion of the Mojave Desert, and San Clemente Island and Santa Catalina Island in the Pacific Ocean.

The most heavily urbanized population centers in L.A. County are to the south. The northern half of the county consists of sparsely populated desert and includes the Santa Clarita Valley and much of the Antelope Valley. Also in the county are much of the San Gabriel Mountains and the expansive wilderness area known as the Angeles National Forest. Los Angeles County is the core of a five-county area known as the Greater Los Angeles Area.

The following rivers drain Los Angeles County:

River	Stream Miles (main stem)	Drainage Area (square miles)
Los Angeles River	97	830
Rio Hondo River	20	125
San Gabriel River	59	350
Santa Clara River	75	1,616

Los Angeles River – The headwaters of the Los Angeles River are just beyond Canoga Park High School at the confluence of Bell Creek and Calabasas Creek. Once, much of the water that flowed through the San Fernando Valley drained into an underground aquifer. Now, since over 60 percent of the San Fernando Valley is paved surface, rainwater is directed to storm drains that empty directly into the river. Once leaving the Glendale Narrows, the Los Angeles River merges with the Arroyo Seco and Rio Hondo forks, forms the lower river, and empties at the river's mouth in Long Beach.

Rio Hondo River – A flood in 1867 caused the San Gabriel River to change course. The old San Gabriel River was renamed the Rio Hondo River after the flood. The Rio Hondo diverges from the San Gabriel River

at the Whittier Narrows, the southern boundary of the San Gabriel Valley. and flows southwest to its confluence with the Los Angeles River in South Gate, passing through several cities, though not the City of Los Angeles. For much of its length, the river flows parallel to the San Gabriel River.

The San Gabriel River – The San Gabriel River Watershed drains the San Gabriel Valley. The San Gabriel River headwaters are in the San Gabriel Mountains. They feed the watershed, which flows 58 miles south to the Pacific Ocean. Major tributaries to the San Gabriel River include Walnut Creek, San Jose Creek, Coyote Creek, and multiple storm drains entering from the 19 cities that the San Gabriel River passes through.

The Santa Clara River – The watershed of the Santa Clara River is bounded by the San Gabriel Mountains to the south and southeast, the Santa Susana Mountains to the southwest, the Liebre Mountains and Transverse Ranges to the northeast and northwest, westward through the Santa Clara River Valley to its mouth in Ventura County. It is one the largest river systems along the coast of Southern California and one of only two remaining river systems in the region that is not channelized by concrete. The Santa Clara River's headwaters take drainage from the northern slopes of the San Gabriel Mountains near the Angeles Forest Highway. They combine into a broad wash near the town of Acton.

Major Geographical Divisions of Los Angeles County:

East	Eastside, San Gabriel Valley, Pomona Valley
West	Beach Cities, Westside
South	South Bay, Palos Verdes Peninsula, South Los Angeles, Gateway Cities
North	San Fernando Valley, parts of the Antelope Valley and Santa Clarita Valley
Central	Downtown Los Angeles, Mid-Wilshire

California is seismologically active. The San Andreas Fault enters the state from the Pacific Ocean near Port Arena and runs about 800 miles southeast through California. It is very active, averaging, according to one source, more than 250 minor events each year.

Southern California is at the junction of two major faults – the San Andreas and San Jacinto. A University of California study found that the stress levels are high along the San Andreas, paving the way for the next "Big One" in the state. In fact, Los Angeles County ranks as No. 1 for estimated annualized earthquake loss, the USGS reported. More recently, the USGS shifted its focus to Southern California's Grapevine area in the northernmost area of Los Angeles County – where the county meets Kern and Ventura counties. There, major quakes have occurred on average every 100 years.

One of the major reasons the USGS put L.A. County at the top of annualized earthquake loss has to do with the population density, the types of buildings located in the county and the likelihood that they may be damaged when a major quake strikes.

Los Angeles County is known for its vast and epic network of freeways. They are a hallmark of Southern California. The freeways are maintained by Caltrans and policed by the California Highway Patrol. In

addition, the county has an expansive network of urban and suburban streets. Most are maintained by city governments. The county's freeways are equally epic in their reputation for traffic and congestion. Freeway interchanges in Los Angeles County often rank among the 10 most congested in the country.

Route	Type of Highway	Commonly Known As	Year Opened
1	State Route	Pacific Coast Highway or PCH	Malibu stretch in 1929
2	State Route	Glendale or Angeles Crest Highway	1958-1978
5	Interstate	Santa Ana (south of Downtown L.A.); Golden State (north of Downtown L.A.)	1945-1958 (south of Downtown L.A.); 1956-1975 (north of Downtown L.A.)
10	Interstate	San Bernardino (east of Downtown L.A.), formerly Ramona; Santa Monica (west of Downtown L.A.), formerly Olympic	1943-1957 (east of Downtown L.A.); 1961-1966 (west of Downtown L.A.)
14	State Route	Antelope Valley	1963-1974
18	State Route	---	---
19	State Route	Lakewood Blvd (south of I-5); Rosemead Blvd (north of I-5)	---
22	State Route	Garden Grove	1964-1967
23	State Route	---	---
27	State Route	---	---
30	State Route	---	1955-1977
39	State Route	---	---
47	State Route	Terminal Island	1947
57	State Route	Orange	---
60	State Route	Pomona	1965-1971
66	State Route	Old Route 66	---
71	State Route	---	---
72	State Route	---	---
90	State Route	Marina, formerly Slauson and Richard M. Nixon	1968-1972
91	State Route	Gardena (west of I-710), formerly Redondo Beach; Artesia (between I-710 & I-5)	1968-1975

Route	Type of Highway	Commonly Known As	Year Opened
101	U.S. Highway	Hollywood (south of Cahuenga); Ventura (north of Cahuenga), formerly Riverside (along the L.A. River)	1940-1948 (south of Cahuenga); 1955-1974 (north of Cahuenga)
103	State Route	---	---
105	Interstate	Glenn Anderson or Century	1993
107	State Route	Hawthorne Blvd, Gardena, formerly Redondo Beach	---
110 (north of Jct. U.S. 101)*	State Route	Arroyo Seco Parkway, formerly Pasadena	1940-1953
110 (south of Jct. U.S. 101)	Interstate	Harbor	1952-1970
118	State Route	Ronald Reagan or Simi Valley-San Fernando Valley	1968-1977
126	State Route	---	---
134	State Route	---	1955-77
138	State Route	---	---
164	State Route	---	---
170	State Route	---	---
187	State Route	---	---
210	Interstate	Foothill	1955-2003
213	State Route	---	---
405	Interstate	San Diego Freeway	1957-1969
605	Interstate	San Gabriel Freeway	1964-1971
710	Interstate	Long Beach Freeway	1952-1965

ECONOMIC ATTRIBUTES

Los Angeles County is commonly associated with the entertainment and digital media industry; all five major film studios—Paramount Pictures, Sony Pictures, Warner Bros., Universal Pictures, and Walt Disney Studios—are located within the county. Numerous other major industries also define the economy of Los Angeles County, including international trade supported by the Port of Los Angeles and the Port of Long Beach, music recording and production, aerospace and defense, fashion, and professional services such

as law, medicine, engineering and design services and financial services. There is considerable high-tech sector employment within Los Angeles County, and manufacturing employment.

Shopping in Los Angeles County ranges from anchored community centers, neighborhood centers, power and lifestyle centers and regional centers. The Beverly Center, The Downtown Los Angeles Fashion District, Glendale Galleria, Melrose Avenue east of Fairfax, Montana Avenue in Santa Monica, Rodeo Drive in Beverly Hills, The Promenade in Santa Monica and the Westfield Mall in Century City rank foremost.

Other major shopping centers in Los Angeles County include the Antelope Valley Mall; Baldwin Hills Crenshaw Shopping Plaza; Del Amo Fashion Center; Eagle Rock Plaza; Fashion Square, Westfield; Fox Hills, Westfield; The Galleria at South Bay Mall; The Grove; Lakewood Center; Los Cerritos Center; Burbank Town Center; Montebello Town Center; Northridge Fashion Center; Promenade, Westfield; Puente Hills Mall; Santa Anita, Westfield; Santa Monica Place; Southbay Pavillion; Stonewood Center Mall; Topanga, Westfield; Valencia Town Center, Westfield; West Covina, Westfield; Westside Pavilion.

There is excellent cumulative attraction for retail properties in Los Angeles County. The county is large enough to have many specialized retail clusters. Commercial buildings (freestanding retail, and neighborhood and convenience shopping centers) can generally be found along most primary thoroughfares in Los Angeles County. There is good equilibrium of generative, supportive and suscipient retail in the Los Angeles County.

GOVERNMENTAL ATTRIBUTES

The Government of Los Angeles County is defined and authorized under the California Constitution, California law and the Charter of the County of Los Angeles. Much of the government of California is in practice the responsibility of local governments such as the government of Los Angeles County.

The county's voters elect a governing five-member Los Angeles County Board of Supervisors. The small size of the board means each supervisor represents over 2 million people. The board operates in a legislative, executive, and quasi-judicial capacity. As a legislative authority, it can pass ordinances for the unincorporated areas (ordinances that affect the whole county, like posting of restaurant ratings, must be ratified by the individual city). As an executive body, it can tell the county departments what to do, and how to do it. As a quasi-judicial body, the board is the final venue of appeal in the local planning process, and holds public hearings on various agenda items.

The Los Angeles County Superior Court is the county's court of general jurisdiction, while the U.S. District Court for the Central District of California may hear cases where federal jurisdiction is present. Both are headquartered in a large cluster of government buildings in the city's Civic Center.

Historically, the courthouses were county-owned buildings that were maintained at county expense, which created significant friction since the trial court judges, as officials of the state government, had to lobby the county Board of Supervisors for facility renovations and upgrades. In turn, the state judiciary successfully persuaded the state Legislature to authorize the transfer of all courthouses to the state government in 2008 and 2009 (so that judges would have direct control over their own courthouses). Courthouse security is still provided by the county government under a contract with the state.

City	Population*
Los Angeles	3,898,747
Long Beach	466,742
Santa Clarita	228,673
Glendale	196,543
Lancaster	173,516
Palmdale	169,450
Pomona	151,713
Torrance	147,067
Pasadena	138,699
Downey	114,355
West Covina	109,501
El Monte	109,450
Inglewood	107,762
Burbank	107,337
Norwalk	102,773
Compton	95,740
Carson	95,558
Santa Monica	93,076
South Gate	92,726
Hawthorne	88,083
Whittier	87,306
Alhambra	82,868
Lakewood	82,496
Bellflower	79,190
Baldwin Park	72,176
Redondo Beach	71,576
Lynwood	67,265
Montebello	62,640
Pico Rivera	62,088
Monterey Park	61,096
Gardena	61,027
Arcadia	56,681
Diamond Bar	55,072
Huntington Park	54,883
Paramount	53,733
Glendora	52,558
Covina	51,268
Rosemead	51,185
Azusa	50,000

City	Population*
Cerritos	49,578
La Mirada	48,008
Rancho Palos Verdes	42,287
Culver City	40,779
San Gabriel	39,568
Bell Gardens	39,501
La Puente	38,062
Monrovia	37,931
Claremont	37,266
Temple City	36,494
West Hollywood	35,757
Manhattan Beach	35,506
San Dimas	34,924
Bell	33,559
Beverly Hills	32,701
Lawndale	31,807
La Verne	31,334
Walnut	28,430
South Pasadena	26,943
Maywood	25,138
San Fernando	23,946
Calabasas	23,241
Cudahy	22,811
Duarte	21,727
Lomita	20,921
La Cañada Flintridge	20,573
Agoura Hills	20,299
Hermosa Beach	19,728
South El Monte	19,567
Santa Fe Springs	19,219
El Segundo	17,272
Artesia	16,395
Hawaiian Gardens	14,149
Palos Verdes Estates	13,347
San Marino	12,513
Commerce	12,378
Signal Hill	11,848
Sierra Madre	11,268
Malibu	10,654

City	Population*
Rolling Hills Estates	8,280
Westlake Village	8,029
La Habra Heights	5,682
Avalon	3,460
Rolling Hills	1,739
Hidden Hills	1,725
Irwindale	1,472
Bradbury	921
Industry	264
Vernon	222

**(2020 Census)*

RAIL: Los Angeles County is a crucial freight railroad transport hub. To a great extent, this is due to volumes of freight transiting the county's port facilities, which are linked to the downtown rail yards and to the main lines of Union Pacific and Burlington Northern Santa Fe headed east via a grade-separated, freight rail corridor known as the Alameda Corridor.

Amtrak provides passenger rail in and through Los Angeles County as does the Los Angeles Metro Rail and Metrolink. Light rail, subway and long-distance bus service are all provided by the Los Angeles County Metropolitan Transportation Authority.

AIR: Los Angeles International Airport (LAX) in Los Angeles is the county's primary domestic and international airport. Additional key pieces of Los Angeles County's air infrastructure are the Long Beach Municipal Airport and the Bob Hope Airport (formerly the Hollywood-Burbank Airport). There have been on-again, off-again plans to expand commercial service to the Palmdale Regional Airport in the Antelope Valley. The county's general aviation airports are in Van Nuys and Pacoima. Van Nuys Airport is the world's busiest general aviation airport and the 25th busiest airport in take-offs and landings in the world. Other general aviation airports are located in Santa Monica, Compton, Torrance, El Monte, Lancaster, and Hawthorne.

PORT FACILITIES: The two primary commercial seaports in the county are the Port of Los Angeles and the Port of Long Beach. Combined, they handle over one-fourth of all container units entering the United States. Measured in shipping volume, the combined ports are the third-largest in the world. In addition, the Port of Los Angeles is the largest cruise ship center on the West Coast. More than one million passengers transit the center annually.

EDUCATION: Institutions of higher learning within Los Angeles County include the following colleges:

Antelope Valley College (Lancaster)	Fuller Theological Seminary (Pasadena)	Los Angeles Pierce College, (Woodland Hills)	Pasadena City College (Pasadena)
Art Center College of Design (Pasadena)	Glendale Community College (Glendale)	Los Angeles Southwest College (Los Angeles)	Pitzer College (Claremont)
The Art Institute of California - Los Angeles (AICALA), Santa Monic	Harvey Mudd College (Claremont)	Los Angeles Trade Technical College (LATTC) (Los Angeles)	Pomona College (Claremont)
California Institute of the Arts (Santa Clarita)	Hebrew Union College (Los Angeles)	Los Angeles Valley College, Valley Glen (Los Angeles)	Rio Hondo College (Whittier)
Cerritos College (Norwalk)	ITT Technical Institute, Culver City, San Dimas, Sylmar (Los Angeles), Torrance, and West Covina	The Master's College, Santa Clarita	Santa Monica College (SMC), Santa Monica
Citrus College, Glendora	Life Pacific College, San Dimas	Mount St. Mary's College, Los Angeles	Scripps College, Claremont
Claremont McKenna College, Claremont	Long Beach City College, Long Beach	Mt. San Antonio College, Walnut	West Los Angeles College, Culver City
College of the Canyons, Santa Clarita	Los Angeles City College (LACC), Los Angeles	Mt. Sierra College, Monrovia	Whittier College, Whittier
DeVry University, Long Beach and West Hills (Los Angeles)	Los Angeles Harbor College, Los Angeles	Occidental College (Oxy), Eagle Rock (Los Angeles)	Wyoming Technical Institute (WyoTech), Long Beach
East Los Angeles College, Monterey Park	Los Angeles Mission College, Sylmar (Los Angeles)	Otis College of Art and Design, Westchester (Los Angeles)	El Camino College, Torrance
Los Angeles Music Academy College of Music, Pasadena	Pacific Oaks College, Pasadena		

Institutions of higher learning within Los Angeles County include the following universities:

American Jewish University (AJULA), Los Angeles	California State University, Long Beach (CSULB), Long Beach	Southern California University of Health Sciences, Whittier	University of the West (UWest), Rosemead
Azusa Pacific University, Azusa	California State University, Los Angeles (CSULA), Los Angeles	Southern California Institute of Architecture (SCI-Arc), Los Angeles	Western University of Health Sciences, Pomona
Biola University, La Mirada	California State University, Northridge (CSUN), Northridge (Los Angeles)	Southwestern University School of Law, Los Angeles	Woodbury University, Burbank
California Institute of Technology (Caltech), Pasadena	Claremont Graduate University, (CGU)	University of California, Los Angeles (UCLA), Westwood (Los Angeles)	California State University, Dominguez Hills (CSUDH), Carson
California State Polytechnic University, Pomona, (Cal Poly Pomona), Pomona	Loyola Marymount University (LMU), Westchester (Los Angeles)	University of La Verne, La Verne	Pepperdine University, Malibu
University of Southern California (USC), Los Angeles			

SOCIAL ATTRIBUTES

There are few superlatives that fully describe the unique characteristics of Los Angeles County. It is the most populous county in the United States. According to 2004 estimates, the population in the county was larger than the separate populations of 42 states. Similarly, it is more populous than the sum of the populations of the 11 least-populous states. In land area, it is equivalent in size to the state of Connecticut and in population to the state of Michigan. More than a quarter of all California residents live in Los Angeles County.

A major inflection point in the history of Los Angeles was the arrival of the railroad to Southern California in 1876. It sparked an exodus from the Midwestern United States as the railroads promoted a new era and modality and travel to the Pacific frontier. The arrival of the Central Pacific and San Francisco in 1876 and the Santa Fe system in 1885 was a catalyst of growth for Los Angeles. It created one of the great migration corridors in United States history, sparking a railroad price war and land boom, and the county of Los Angeles was the main beneficiary.

In 1880, the population of pastoral Los Angeles County was a mere 33,381, according to census data. By the census of 1890, Los Angeles County had grown 204 percent during the decade to 101,454.

The expansion of Los Angeles County in the 1880s occurred in lockstep with a railroad speculation bubble that was not unlike the Tech Bubble of the late 1990s and the real estate credit bubble that culminated in 2005. During 1880s, the railroads became significantly overbuilt and overleveraged (to use modern-day jargon) and a sense of irrational euphoria prevailed.

The bankruptcy of Philadelphia and Reading Railroad is widely credited with sparking the Panic of 1893, which resulted in a major nationwide economic contraction. Approximately 500 banks failed, along with many railroads, including the Northern Pacific Railway, the Union Pacific Railroad and the Atchison, Topeka & Santa Fe Railroad.

Families and individuals who were hard-hit abandoned their homes and headed West, thus increasing Los Angeles County's Population from 1890 to 1900 by a mere 68 percent for the decade. The economy began to recover under William McKinley in 1896, setting the stage for a new massive wave of growth between 1900 and 1910, when the Los Angeles County population grew 196 percent.

Los Angeles County's population was estimated at 10,014,009 in 2020, which shows a total percentage change of 1.99% since the 2010 census. Its average household size is 2.96. The median household income in Los Angeles County is $71,358. Its population density is 2,467 persons per square mile. There is a reported poverty rate of 13.2%. The median rental costs in recent years comes to $1,534 per month, and the median house value is $615,500.

CITY OVERVIEW

OVERVIEW OF SAN FERNANDO VALLEY

The San Fernando Valley is an urban valley in Los Angeles County. Located just north of the Los Angeles Basin, it contains a large portion of the City of Los Angeles, as well as unincorporated areas and the incorporated cities of Burbank, Calabasas, Glendale, Hidden Hills, and San Fernando.

PHYSICAL/GEOGRAPHIC ATTRIBUTES

The San Fernando Valley is approximately 260 square miles. It is bounded by the Santa Susana Mountains to the northwest, the Simi Hills to the west, the Santa Monica Mountains to the south, the Verdugo Mountains to the east, and the San Gabriel Mountains to the northeast.

The Los Angeles River begins at the confluence of Calabasas Creek (Arroyo Calabasas) and Bell Creek (Escorpion Creek), between Canoga Park High School and Owensmouth Avenue (just north of Vanowen Street) in Canoga Park.

The San Fernando Valley has geographical linkages to other regions. The Santa Clarita Valley via Newhall Pass, the Westside via Sepulveda Pass and Laurel Canyon, Hollywood via Cahuenga Pass, Simi Valley via Santa Susana Pass, and the Crescenta Valley via Interstate 210.

The San Fernando Valley is home to numerous neighborhood city parks, recreation areas and large Regional Open Space preserves. Many preserves are maintained as public parkland by the National Park Service's Santa Monica Mountains National Recreation Area, the California State Parks, and local county and municipal parks districts.

Major freeways that traverse the Valley include Interstate 405 (San Diego Freeway), U.S. Route 101 (Ventura Freeway/Hollywood Freeway), State Route 118 (Ronald Reagan Freeway), State Route 170 (Hollywood Freeway), Interstate 210 (Foothill Freeway), and Interstate 5 (Golden State Freeway).

Notable arterials include Sepulveda Boulevard, Ventura Boulevard, Laurel Canyon Boulevard, San Fernando Road, Victory Boulevard, Reseda Boulevard, Riverside Drive, Mulholland Drive, and State Route 27 (Topanga Canyon Boulevard).

ECONOMIC ATTRIBUTES

The San Fernando Valley is well known for film studios such as Warner Bros. Studio and Walt Disney Studios. In addition, it is home to the Universal Studios Hollywood theme park.

The Valley is home to numerous companies, the most well-known of which work in motion pictures, music recording, and television production. The former movie ranches were branches of original studios now consisting of CBS Studio Center, NBCUniversal, The Walt Disney Company (and its ABC television network), and Warner Bros.

It was previously known for advances in aerospace technology and nuclear research by companies such as Lockheed, Rocketdyne and its Santa Susana Field Laboratory, Atomics International, Litton Industries, Marquardt, and TRW's predecessor Thompson Ramo Wooldridge.

GOVERNMENTAL ATTRIBUTES

Most of the San Fernando Valley is within the jurisdiction of the City of Los Angeles, although a few other incorporated cities are located within the Valley as well: Burbank is in its southeastern corner, and San Fernando, which is completely surrounded by the City of Los Angeles, is near the northern end of the Valley. Universal City, an enclave in the southern part of the Valley, is an unincorporated area housing the Universal Studios filming lot and theme park. Mulholland Drive, which runs along the ridgeline of the Santa Monica Mountains, marks the boundary between the valley and the communities of Hollywood and the Los Angeles Westside.

In 2002, the valley tried to secede from the City of Los Angeles and become its own incorporated city to escape Los Angeles' perceived poverty, crime, gang activity, urban decay, and poorly maintained infrastructure.

The movement gained some momentum, but measure F did not receive the necessary votes to pass. Since that unsuccessful secession attempt, a new Van Nuys municipal building was built in 2003; the Metro Orange Line opened in October 2005; and 35 new public schools had opened up by 2012.

LA Metro will begin construction on upgrades of the Metro G Line in 2021 with at-grade crossing gates and two bridges crossing both Sepulveda and Van Nuys Boulevards. The Valley is due to get its first light rail line in seven decades by 2027, with construction of the line beginning in 2021 along Van Nuys Boulevard and San Fernando Road.

Public schools in the San Fernando Valley are served by three unified school districts: the Los Angeles Unified School District, the Glendale Unified School District and the Burbank Unified School District. There are four community colleges in the Valley; Los Angeles Valley College in Valley Glen, Los Angeles Mission College in Sylmar, and Los Angeles Pierce College in Woodland Hills. All except Glendale College are served by the Los Angeles Community College District. The only state university in the San Fernando Valley is California State University Northridge.

In 1994 there were 180,000 PK-12 students attending Los Angeles Unified School District (LAUSD) campuses in the Valley. During the same year, about 45,000 PK-12 students, or one in five of all such students, attended the over 200 private schools in the Valley.

Subway, dedicated transitway, and express and local buses, provided by many agencies, serve the San Fernando Valley. Some of the former rights-of-way of the Pacific Electric Railway, which first accelerated population growth in the Valley, have been repurposed for busways and light rail lines.

The Los Angeles County Metropolitan Transportation Authority operates two Metro B Line subway stations in the Valley, which are located at Universal City and North Hollywood, which connect it directly to Hollywood and Downtown Los Angeles. The Metro B Line is the first heavy rail subway in the valley,

extended from its prior terminus in 2000. With transfers, it connects the Valley to the entire Metro regional light rail and subway network. The B Line's two Valley subway stations provide access to national travel through Bob Hope Airport and Amtrak and regional travel through Metrolink, Metro Rapid, Metro Local, and the Metro G Line. Metro approved a new light rail line, the East San Fernando Valley Transit Corridor. A new north–south light rail line on Van Nuys Boulevard from the G Line Van Nuys Station is planned. Construction began in 2021 with a completion date of 2027.

The G Line busway uses a dedicated transitway route running the east–west length of the Valley connecting the North Hollywood B Line Station through the valley, then heads north through Canoga Park to the Chatsworth Metrolink station.

Two additional Metro Busway lines are planned for the Valley operating from North Hollywood station: the North Hollywood–Pasadena Transit Line which will run to Pasadena with connections to the L Line, and the North San Fernando Valley Transit Corridor, which will provide additional east-west services complimenting the G Line. Metro is also studying a route through the Sepulveda Pass, the Sepulveda Pass Transit Corridor, including heavy rail and monorail alternatives.

Metrolink commuter rail has two Valley lines, the Antelope Valley Line and Ventura County Line, which connect the Valley and beyond to downtown Los Angeles and south, becoming one line at the Downtown Burbank station. Metrolink always had one Burbank Airport station on the Ventura County Line, but a second Burbank Airport station was built in 2017 on the Antelope Valley Line.

Amtrak's Pacific Surfliner long-distance rail line has stops at Burbank Airport station, Van Nuys, and Chatsworth Station, before proceeding on to Ventura County, Santa Barbara, and Northern California or Union Station and San Diego.

The California High-Speed Rail Authority was planning two stations in the Valley, one in Burbank and the other in Sylmar, but the proposed Sylmar high-speed rail station was canceled owing to local opposition from the city of San Fernando. As of now, there's only one planned station in the valley, located in Burbank with an initial section of the railroad possibly opening in 2029.

The Valley's two major airports are Hollywood Burbank Airport and the Van Nuys Airport. The Van Nuys–Airport FlyAway Terminal provides nonstop scheduled shuttle service to LAX and back to the valley, with parking.

Most of the utilities in the valley are served by public municipal governments, primarily the cities of Los Angeles, and Burbank, while there are only two private-owned utilities for gas and electricity in the valley as well. Southern California Edison has their overhead power lines going through the city of Burbank and through the Los Angeles city neighborhoods of Sylmar, Mission Hills, Arleta, North Hollywood, Studio City, Woodland Hills, Granada Hills, Porter Ranch, and Chatsworth as well.

SOCIAL ATTRIBUTES

The most populous districts of Los Angeles in the Valley are Van Nuys and Pacoima, which like the city of Burbank have more than 100,000 residents each. Despite the San Fernando Valley's reputation for

sprawling, low-density development, the valley communities of Panorama City, North Hollywood, Van Nuys, Reseda, Canoga Park, and Northridge, all in Los Angeles, have numerous apartment complexes and contain some of the densest census tracts in Los Angeles.

The San Fernando Valley has a significant population below the poverty level. About 30 percent of Valley households in 2009 earned less than $35,000 a year, including 10 percent who made less than $15,000 a year. San Fernando Valley neighborhoods such as North Hollywood, Panorama City and Arleta have high poverty rates.

In general, the areas with lower poverty rates have become fewer and more scattered, while many of the now affluent communities have become compartmented, having their own private, planned and gated communities. Many of these tend to be on or near the borders of the Valley in the foothill regions.

NEIGHBORHOOD OVERVIEW

The subject is in the incorporated City of Los Angeles. The following applies within the subject's census block:

Subject's Census Tract	
Population	2,128
5 Yr Projected Pop	2,115
Households	873
Avg HH Size	2.39
Median HH Income	$127,132
Median Age	50.2
% College Graduate	60%

The appraiser also looked at household income, median age, average household size and the rental occupancy rate within a one-, two- and three-mile radius of the subject.

INCOME CHARACTERISTICS

	1 Mile	**2 Miles**	**3 Miles**
Median Household Income	$115,987	$109,777	$103,730
Median Age	46	44	42
Average Household Size	2.61	2.61	2.69
Renter Occupancy Rate	25%	34%	36%

From the comparative data, it can be seen that as the population moves closer to the subject property, the median household income increases, the median age of the population increases and the percentage of renter-occupants decreases. This indicates an older demographic with greater disposable income and lower renter-occupancy as one nears the subject.

MARKET OVERVIEW

The subject larger parcel is zoned for open-space use. This is a restricted land use that lacks some of economic characteristics of other established real-estate sectors. The rural residential market is the best surrogate for open-space land in the appraiser's opinion. Therefore, we look at the housing market as a bellwether for open space.

Housing, which is a key segment of the national economy, appear very weak right now, based on a recent report by the National Association of Home Builders. "We're heading into a recession," the group's CEO Jerry Howard told Bloomberg in a recent interview. He described how a rapid decline in homebuilding and demand for new homes could drag the national economy lower.

Residential real estate is a key component of the American economy. Housing activity contributes between 15% to 18% of gross domestic product. A slowdown in this sector can depress the rest of the economy.

A decline in home building and buying has led to every recession since the end of the Second World War, according to the NAHB. The association's latest report indicates that buyers and builders are both pulling back from the market yet again, which could be a leading indicator for another recession on the horizon in 2022.

On the demand front, potential homebuyers have receded from the market. Existing home sales slid 5.4% in June. Meanwhile, borrowing capacity has been curtailed by rising interest rates. The average mortgage rate has accelerated at the fastest pace in 35 years. A 15-year fixed rate mortgage is now about 4.8%, up from 2.2% a year ago. These factors have effectively destroyed demand.

Home prices are officially falling, as well, reports the Los Angeles Times in late July 2022. Prices generally peak during summer, but the median sale price dropped by $10,000 from May to June. It might not seem that notable, but the last time the median price dropped from May to June was back in 2010.

Properties are staying on the market longer. Mortgage rates are soaring. Homes are no longer selling for more than the asking price. Contingencies are no longer being waived, reports the Times.

Southern California home prices and sales edged lower in June from the month before, adding to evidence that the housing slowdown is starting to pull home values lower.

The data, released in late July by DQNews, mark the first month since January that Southern California's ultra-competitive housing market saw a decline in the median home price. The median is the price at which half the homes sold for more and half for less.

The region's six-county median sale price was $750,000, down from $760,000 in May. However, a broader view shows that prices are still soaring compared with last June, when the median price was $679,000.

DETERMINATION OF LARGER PARCEL

The "Larger Parcel" is defined as a portion of a property which has unity of ownership, contiguity, and unity of use. In federal and some state cases, however, contiguity is sometimes subordinated to unitary use. The latter is the case here, as there is undeniable unity of use and unity of ownership. For the purposes of the appraisal, Chatsworth Park North and Chatsworth Park South are viewed as one conceptual economic unit. Ownership records for surrounding properties have been reviewed and the subject ownership entity has title interest in assessor's parcels 2723-009-903 and 2723-010-904. Both comprise the larger parcel.

IDENTIFICATION OF PARCEL OWNERSHIP

Mailing Address	200 N Spring Street Los Angeles, CA 90012
Representative	Ian Kim Planning, Maintenance and Construction
Telephone/email	213-202-2658 / ian.kim@lacity.org
Owner Title of Interest	Fee Simple
Ownership History	The subject larger parcel, to the appraiser's knowledge, is not offered for sale on the open market or listed, under contract or under option. Additionally, the subject larger parcel has not, to the appraiser's knowledge, been transferred in a sales transaction during a five-year period prior to the effective date of value. The property owner was sent a notice of decision to appraise by Hamner, Jewell & Associates dated August 30, 2022. Several project meetings have taken place since early 2018 and representatives of the City of Los Angeles were invited to attend two on-site meetings. Several representatives of the City of Los Angeles have attended. Hamner, Jewell & Associates has been in contact with representatives of the property owner since 2018.

ASSESSOR'S PARCEL MAP (APN 2723-009-903)

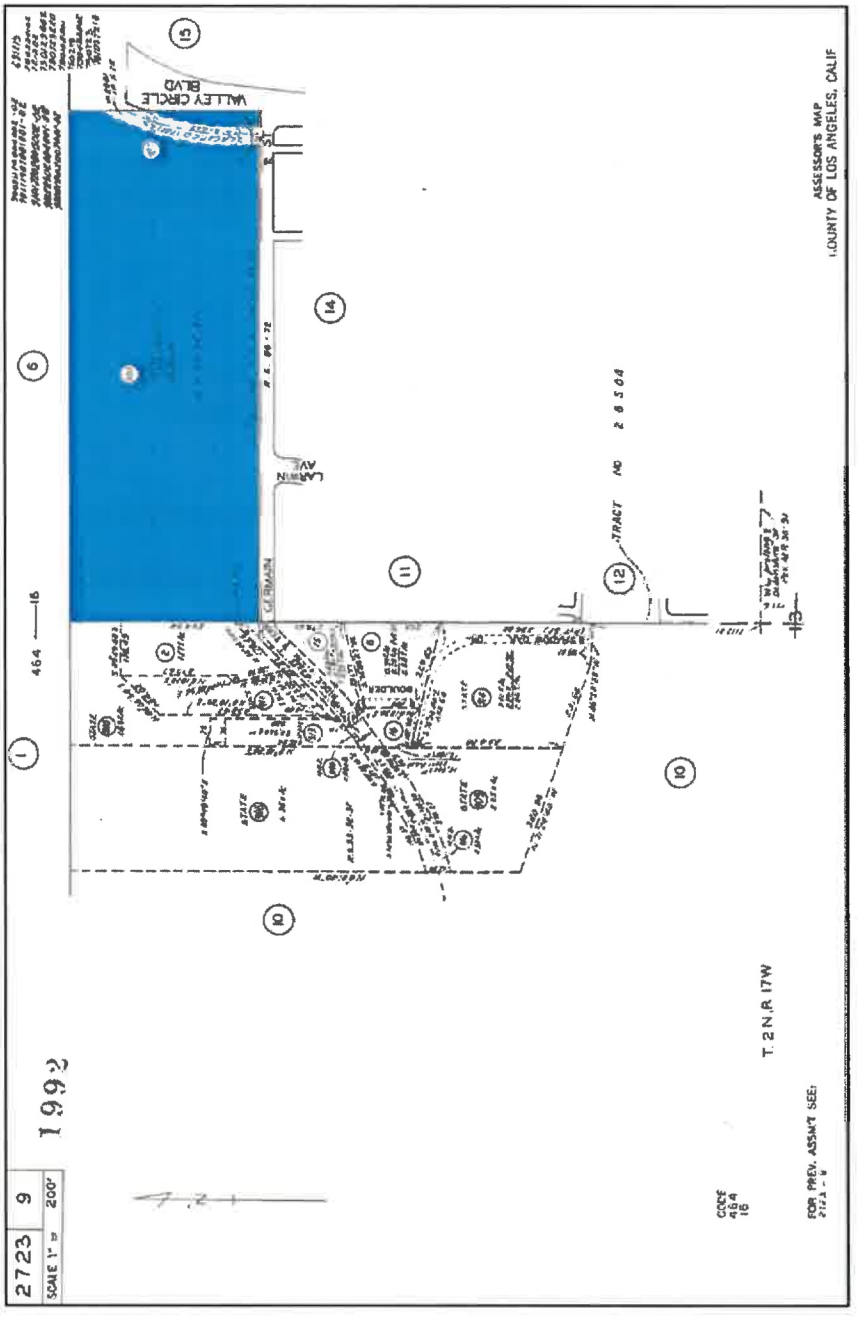

ASSESSOR'S PARCEL MAP (APN 2723-010-904)

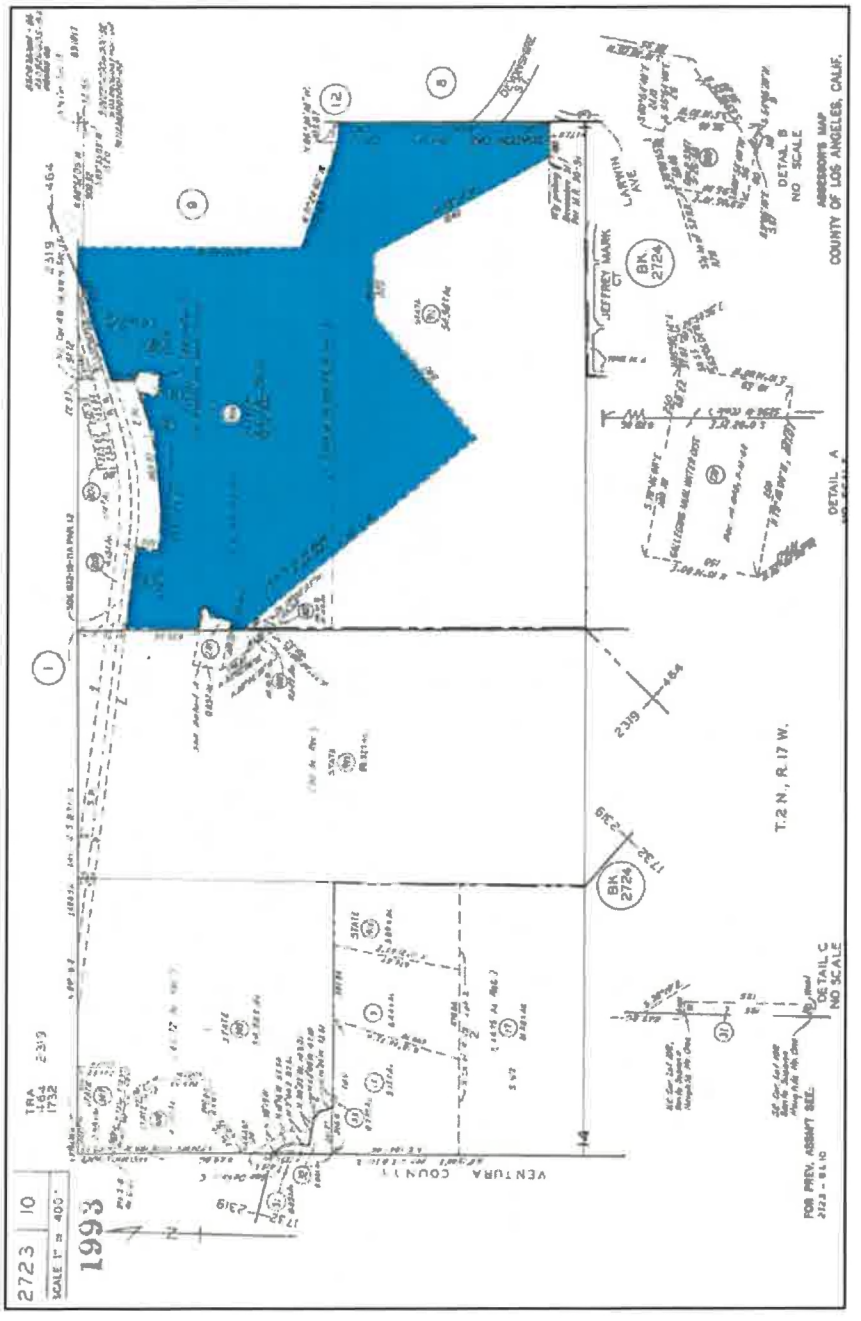

AERIAL PHOTOGRAPH (LARGER PARCEL)



SUBJECT PROPERTY PHOTOGRAPHS



Germain Street and proposed acquisition area looking east.



Germain Street and proposed acquisition area looking west.

SUBJECT PROPERTY PHOTOGRAPHS



Germain Street and proposed acquisition area looking east.



Germain Street and proposed acquisition area looking east.

SUBJECT PROPERTY PHOTOGRAPHS



Proposed acquisition area looking west.



Entrance to Chatsworth Park South.

LARGER PARCEL DESCRIPTION

Lot Size	14.63± Acres (637,283± SF) 74.75± Acres (3,256,110± SF) 89.38± Acres (3,893,393± SF) Source: Assessor's data and plats
Shape	Irregular and noncontiguous
Frontage	The larger parcel has approximately 125 feet of frontage along Shadow Oak Drive, a public street that then enters the interior of Chatsworth Park South. The Chatsworth Park North has about 1,275 feet of frontage along Germain Street. Frontage is not considered an element of value with open-space or rural residential properties.
Exposure	The larger parcel has minimal visibility, with some degree of visibility the "outer" portion of Shadow Oak Drive and about 1,275 feet of visibility from Germain Street, a small street that serves as a collector for a condominium complex. Exposure, like frontage, is not considered an element of value with open-space or rural residential properties.
Access	The Chatsworth Park North portion of the larger parcel can be accessed via Farralone Avenue, which is off Chatsworth Street. It can also be accessed via Valley Circle Boulevard and Germain Street. The Chatsworth Park South portion of the larger parcel can be accessed via Devonshire Street and Boulder Ridge Terrace, which appears to be a private roadway.
Topography	The larger parcel contains an estimated 60% level ground with about 40% upslope areas of boulders and jagged rocky outcroppings. Its drainage appears adequate.

Utilities

All utilities are to the site.

Zoning

OS-1XL, Open-Space with Extra-Low Height District. The maximum height is 30' in height district 1XL.

It is the purpose of the "OS" Open Space Zone to provide regulations for publicly owned land in order to implement the City's adopted General Plan, including the recreation, parks and open space designations in the City's adopted district and community plans, and other relevant elements, including the Open Space, Conservation and Public Recreation Elements. Implementation of the General Plan will serve to protect and preserve natural resources and natural features of the environment; to provide outdoor recreation opportunities and advance the public health and welfare; to enhance environmental quality; to encourage the management of public lands in a manner which protects environmental characteristics; and to encourage the maintenance of open space uses on all publicly owned park and recreation land, and open-space public land which is essentially unimproved.

The following regulations apply to publicly owned land classified in the "OS" Open Space Zone: no building, structure or land shall be used and no building or structure shall be erected, moved onto the site, structurally altered, enlarged or maintained, except for the following uses:

1. The following uses and activities when conducted in accordance with the limitations hereafter specified.

(a) Types of Uses.

(i) Parks and recreation facilities, including: bicycle trails, equestrian trails, walking trails, nature trails, park land/lawn areas, childrens' play areas, child care facilities, picnic facilities, and athletic fields (not to exceed 200 seats in park) used for park and recreation purposes.

(ii) Natural resource preserves for the managed production of resources, including, but not limited to, forest lands, waterways and watersheds used for commercial fisheries; agricultural lands used for food and plant production; areas containing major mineral deposits ("G" Surface Mining Districts) and other similar uses.

(iii) Marine and ecological preserves, sanctuaries and habitat protection sites.

(iv) Sanitary landfill sites which have received certificates of closure in compliance with federal and state regulations.

(v) Public water supply reservoirs (uncovered) and accessory uses which are incidental to the operation and continued maintenance of such reservoirs.

(vi) Water conservation areas, including percolation basins and flood plain areas.

Special Plan

None known.

General Plan Designation

Open space

Improvements

Chatsworth Park North contains barbecue pits, a lighted baseball diamond, lighted outdoor basketball courts, children's play area, a lighted football field, picnic tables, a lighted soccer field, and unlighted volleyball courts.

Chatsworth Park South contains a gymnasium, two playgrounds (one for toddlers and one for big kids), access to hiking trails, open field for kites and picnics, and basketball and tennis courts. It facilitates programs such as dance, gymnastics, fitness exercise, martial arts, basketball, equestrian and soccer.

As will be explained in subsequent sections of this report, the property is appraised as land only for the purposes of an easement valuation.

Lease, Rental and License Status

Not applicable.

Permits	None known.
Easements	The appraiser was provided two preliminary title reports by Chicago Title Company. One, for APN 2723-009-903, is dated May 30, 2018. The other, for APN and 2723-010-904, is dated May 4, 2018. Exceptions to coverage are too numerous to list here. They are provided in truncated versions of the reports in the addendum of this report. The property is appraised on an undivided fee basis. The appraiser is not aware of any easements, encroachments or restrictions that would adversely affect value. This valuation assumes no such adverse effects, and further assumes that the subject has clear and marketable title.
Encroachments	No encroachments were observed or are known.
Private Restrictions	None known.
Flood Zone	The larger parcel, as reported by FEMA, is within a Zone D, Zone A and a Zone X. The Panel No. is 06037C1040F, effective 09/26/2008. Approximately three-quarters of the larger parcel is within Zone D. Zone D is an area with possible but undetermined flood hazards. No flood hazard analysis has been conducted in this zone. The Zone A is an area with a 1% annual chance of flooding and a 26% chance of flooding over a 30-year period. Because detailed analyses are not performed for such areas; no depths or base flood elevations are shown within these zones.
Wetlands	The property is outside any known wetlands; the appraiser saw no indication that the property is located in a wetlands.
Seismic Information	This parcel is not within an Earthquake Fault Zone, according to the California Geologic Study's "EQ Zapp" application.
Cultural, Recreational and Historic Significance	None known.

Toxic Hazards

The appraiser has not been provided a Phase 1 Environmental Site Assessment. The California Water Resources Control Board shows a former small-arms firing range was on the site.

A portion of the subject property (the westerly canyon bottom area at Chatsworth Park South) was previously utilized as a skeet shooting range owned by the Aqua Sierra Sportsman's Club. The skeet range which was developed on the western portion of the subject property occupied about 12 acres with the shooting stations located on the south side of the canyon bottom. The park was reportedly closed in 2008 when lead pellets and other contaminants were discovered at the site. The city purchased the property and turned it into a public park in 1978. It entered into a voluntary cleanup agreement with the Department of Toxic Substances Control to investigate and remediate the site.

The city conducted a ground-breaking ceremony in August 2018 to announce the cleanup and reopening of the park site.

Property Tax Data and Projected Taxes

The subject larger parcel is owned by the City of Los Angeles. As such, it is exempt from ad valorem property taxes and assessments. It is an assumption that were the subject larger parcel placed into private hands, the level of property taxes would be on par with market expectations.

OVERALL COMMENTS

The larger parcel consists of 89.38± acres, or 3,893,393± square feet. It is non-contiguous and contains assessor's parcels 2723-009-903 and 2723-010-904 with 125 feet of frontage along Shadow Oak Drive and 1,260 feet of frontage along Germain Street. The two parcels constitute a city park, known as Chatsworth Park North and South respectively. All utilities are to the site. Its topography varies. It contains an estimated 60% level ground with about 40% upslope areas of boulders and jagged rocky outcroppings. Its drainage appears adequate. The property has good access. Off-site improvements are adequate. It is within FEMA Zones D, A and X. Its zoning is OS-1XL, which is a restrictive zone limited to open-space uses. It appears to be legally conforming and well-suited to its use.

PROJECT DESCRIPTION AND PROPOSED ACQUISITIONS

DESCRIPTION OF PROJECT

Las Virgenes Municipal Water District is a special district with a service area encompassing 122-square miles in western Los Angeles County. Its service area includes the incorporated cities of Hidden Hills, Calabasas, Agoura Hills and Westlake Village, as well as unincorporated areas. It provides potable water, recycled water and wastewater service to a population of approximately 82,000. Construction of the Deerlake Ranch development (Tract 53138) in the northeast of the district, among other developments, will cause an increase in demand during an interruption of service on MWD's West Valley Feeder #2 line. When such an outage occurs, water is delivered through a temporary connection to a Los Angeles Department of Water & Power hydrant and meter on Germain Street, east of Chatsworth Park South. The new 16" pipeline will ensure increased demands are met during any outage of the West Valley Feeder #2.

DESCRIPTION OF PROPOSED ACQUISITIONS

The Las Virgenes Municipal Water District is seeking permanent easements in gross to install, construct, alter, operate, remove, replace, and maintain a water conduit, consisting of one or more underground water pipelines and related facilities. These related facilities may include markers, air valves, manholes, valves, meters, surge control devices, test stations, buried communication devices, buried electrical conduits and devices, pull boxes, and all related incidents, fixtures, and appurtenances. The latter may be located above ground or partially above ground. While the proposed easement will be "in, over, on, through, within, under, and across the easement area of the real property." To the appraiser's understanding, the rights proposed are principally underground rights with surface rights for initial installation and occasional maintenance of the underground infrastructure.

For assessor's parcel 2723-009-903, the proposed easement will be generally along Germain Street, along the southern border of the parcel, around trees, through ballpark outfield, through a parking lot and space east of the flood channel. The proposed permanent easements will be 20' wide.

For assessor's parcel 2723-010-904, the proposed pipeline easement will be along an existing access road. It is a permanent 30'-wide easement.

Temporary construction easements are also sought for the purposes of facilitating construction of facilities, including the right to place equipment and vehicles in those proposed areas, pile earth thereon, and utilize the proposed easement areas for all other related activities and purposes in, on, over, under, through, and across that certain portion of the real property. The duration for the temporary construction easements is one year. The areas are laid out in the table on the following page and in the descriptions and maps that follow.

Item	Total
Larger Parcel	89.38± Acres (3,893,393± Square Feet)
Permanent Easement Acquisitions (2723-009-903)	
Area (A-5 and B-5) – Gross	0.375± Acres (16,342± Square Feet)
Area (A-5 and B-5) – Unencumbered (Net)	0.326± Acres (14,219± Square Feet)
Area (A-5 and B-5) – Previously encumbered	0.049± Acres (2,123± Square Feet)
Area (A-1 and B-1)	0.045± Acres (1,981± Square Feet)
Permanent Easement Acquisition (2723-009-904)	
Area (A-19 and B-19) – Gross	0.697± Acres (30,368± Square Feet)
Area (A-19 and B-19) – Unencumbered (Net)	0.375± Acres (16,314± Square Feet)
Area (A-19 and B-19) – Previously encumbered	0.323± Acres (14,054± Square Feet)
Remainder Parcel	89.38± Acres (3,893,393± Square Feet)
Temporary Construction Easements (2723-009-903)	
Area (A-6 and B-6) – Gross	0.238± Acres (10,373± Square Feet)
Area (A-6 and B-6) – Unencumbered (Net)	0.166± Acres (7,228± Square Feet)
Area (A-6 and B-6) – Previously encumbered	0.072± Acres (3,145± Square Feet)
Area (A-2 and B-2)	0.058± Acres (2,539± Square Feet)
Temporary Construction Easement (2723-009-904)	
Area (A-20 and B-20) – Gross	0.242± Acres (10,538 ± Square Feet)
Area (A-20 and B-20) – Unencumbered (Net)	0.106± Acres (4,626 ± Square Feet)
Area (A-20 and B-20) – Previously encumbered	0.136± Acres (5,912 ± Square Feet)

DESCRIPTION OF THE REMAINDER

The remainder will be unaffected by the proposed acquisition in terms of any size reduction to the site, since what is being sought are easement rights. Any trees on or near the proposed permanent easement area will be either protected in place or replaced with commercially available 24-inch box trees in what is being called "mitigation." Any removal of Coast Live Oaks will be replaced according to the Notice of Exemption provided in the addendum. The current use of the property is expected to continue as-is once the installation and restoration are completed. Exhibits showing and describing the proposed acquisitions follow:

EXHIBIT "A-1"

LEGAL DESCRIPTION
FOR PERMANENT EASEMENT
(PORTION OF APN 2723-009-903)

Being a strip of land, 20.00 feet wide, in the City of Los Angeles, County of Los Angeles, State of California, over a portion of the Northeast Quarter of Section 13, Township 2 North, Range 17 West, San Bernardino Meridian, the centerline of said strip of land described as follows:

Beginning at a point in the southerly line of the lands described in Resolution No. 2529, recorded July 3, 1958, as Instrument No. 1112 of Official Records of Los Angeles County, said point bears North 89°44'19" West 21.36 feet from the southeasterly corner of said lands; thence,

1st: North 0°01'18" East 79.41 feet; thence,

2nd: West 19.65 feet to the intersection with the easterly line of Parcel No. 135A, as described in the Judgment and Final Order of Condemnation recorded October 5, 1972, as Instrument No 2981 of Official Records of Los Angeles County.

The sidelines of said strip of land to be lengthened or shortened to terminate southerly in said southerly line of Resolution No. 2529, and westerly in said easterly line of Parcel No. 135A.

Containing 1,981 square feet, more or less.

Larry Frager 6/1/22

Larry J. Frager, P.L.S. 7998 Date

PROFESSIONAL LAND SURVEYOR
LARRY J FRAGER
No. 7998
STATE OF CALIFORNIA

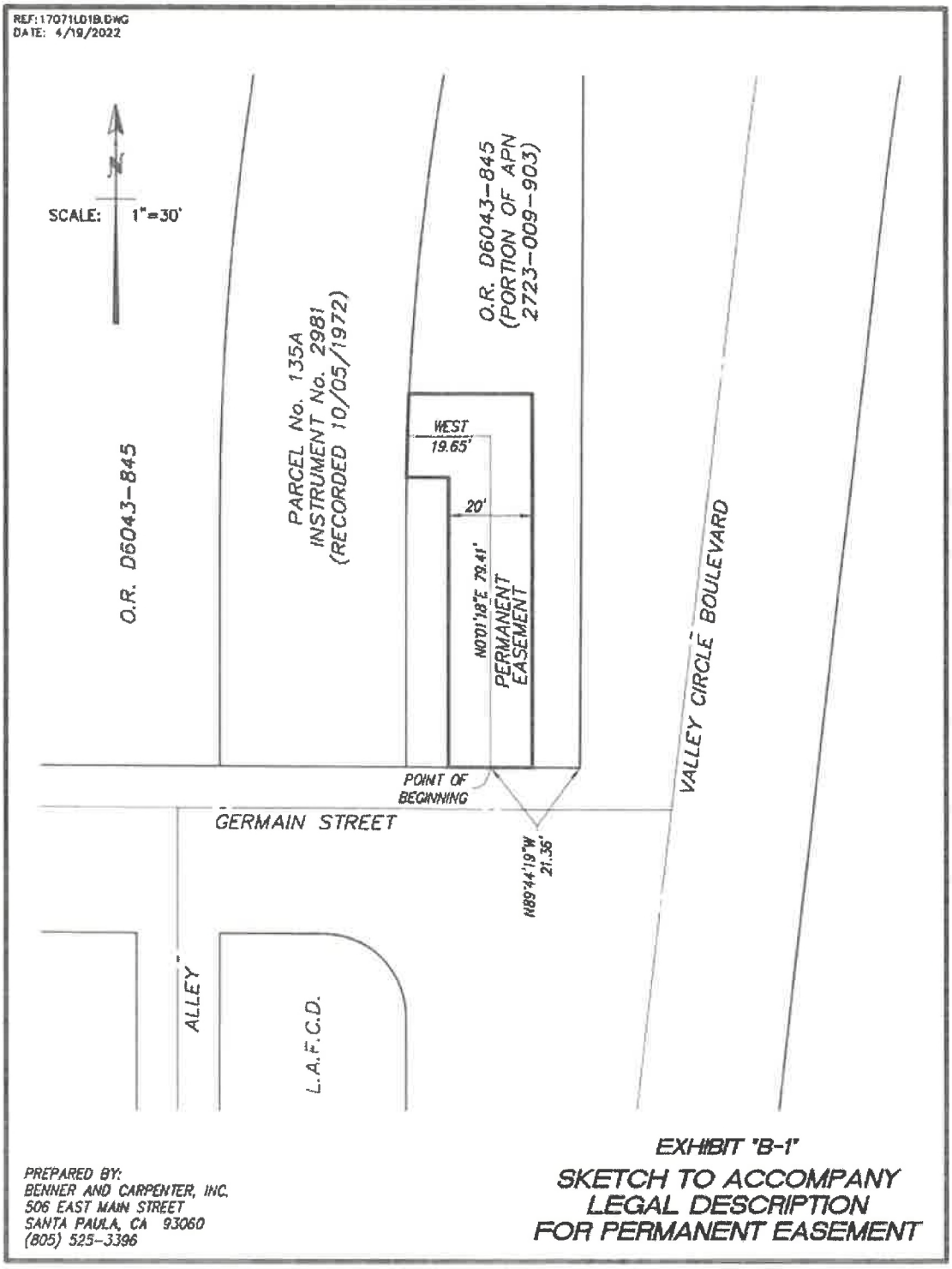
REF: 17071L01B.DWG
DATE: 4/19/2022
N
SCALE: 1"=30'
O.R. D6043-845
PARCEL No. 135A
INSTRUMENT No. 2981
(RECORDED 10/05/1972)
O.R. D6043-845
(PORTION OF APN
2723-009-903)
WEST
19.65'
20'
N01°18'E 79.41'
PERMANENT
EASEMENT
VALLEY CIRCLE BOULEVARD
POINT OF
BEGINNING
GERMAIN STREET
N89°44'19"W
21.36'
ALLEY
L.A.F.C.D.
EXHIBIT "B-1"
SKETCH TO ACCOMPANY
LEGAL DESCRIPTION
FOR PERMANENT EASEMENT
PREPARED BY:
BENNER AND CARPENTER, INC.
506 EAST MAIN STREET
SANTA PAULA, CA 93060
(805) 525-3396

EXHIBIT "A-5"

LEGAL DESCRIPTION

FOR PEMANENT EASEMENT

(PORTION OF APN 2723-009-903)

Being a strip of land, 20.00 feet wide, in the City of Los Angeles, County of Los Angeles, State of California, over a portion of the Northeast Quarter of Section 13, Township 2 North, Range 17 West, San Bernardino Meridian, the centerline of said strip of land described as follows:

Beginning at a point in the southerly line of the lands described in Resolution No. 2529, recorded July 3, 1958, as Instrument No. 1112 of Official Records of Los Angeles County, said point bears North 89°44'19" West 21.36 feet from the southeasterly corner of said lands; thence,

1st: North 0°01'18" East 79.41 feet; thence.
2nd: West 365.82 feet; thence,
3rd: South 45°00'17" West 130.70 feet; thence,
4th: West 434.53 feet; thence,
5th: North 45°03'51" West 68.34 feet; thence,
6th: North 89°44'00" West 153.48 feet; thence,
7th: South 66°29'51" West 44.71 feet; thence,
8th: North 89°45'41" West 147.02 feet; thence,
9th: South 61°04'48" West 20.42 feet to the intersection with the East line of the Northwest Quarter of said Section 13.

EXCEPTING THEREFROM any portion of said strip of land which does not lie within that portion of said Resolution No. 2529 which lies westerly of Parcel No. 135A, as described in the Judgment and Final Order of Condemnation recorded October 5, 1972, as Instrument No. 2981 of Official Records of Los Angeles County.

Containing 16,342 square feet, more or less.

Larry Frager 6/1/22

Larry J. Frager, P.L.S. 7998 Date



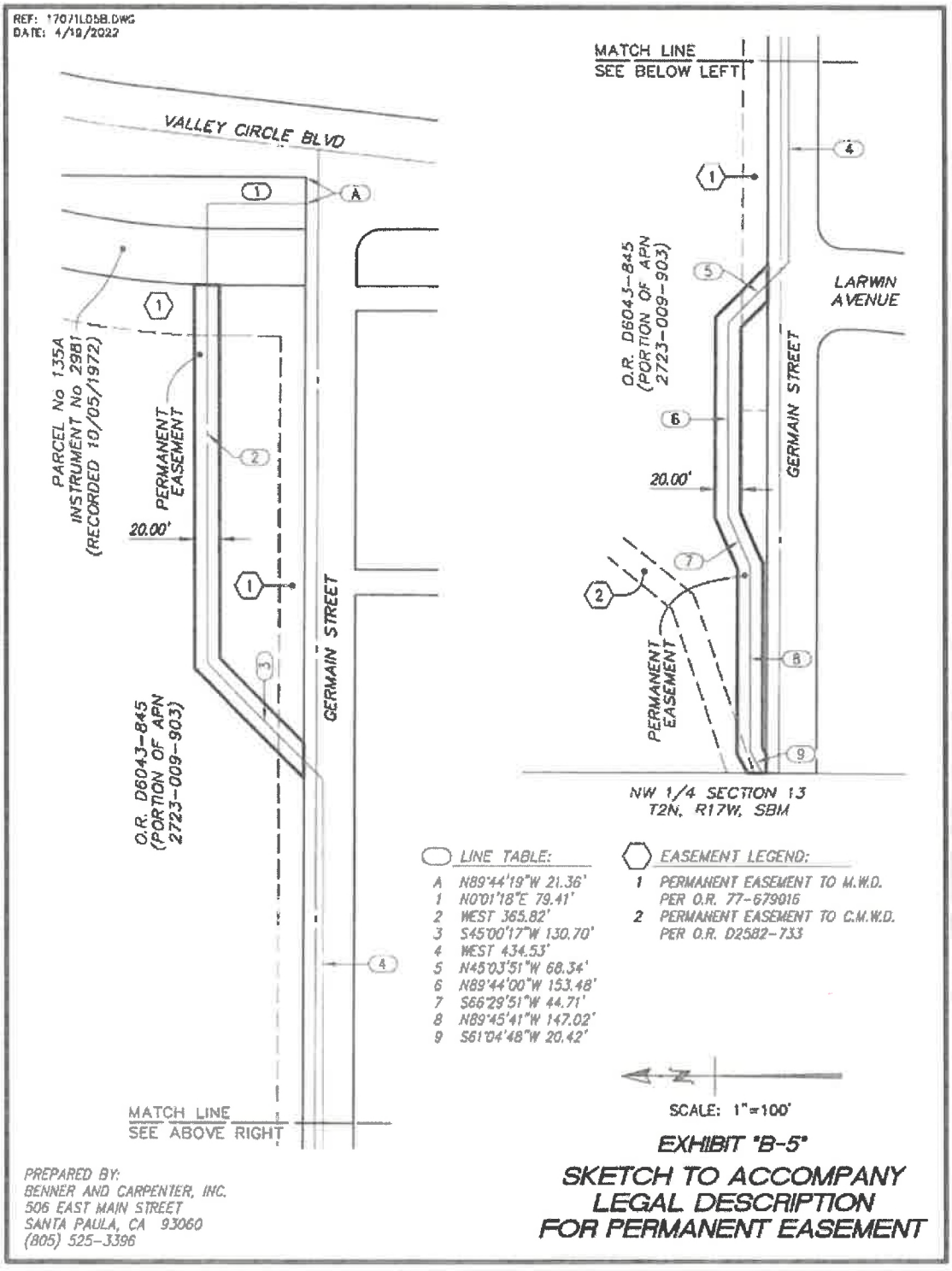
REF: 17071L05B.DWG
DATE: 4/18/2022
VALLEY CIRCLE BLVD
MATCH LINE
SEE BELOW LEFT
PARCEL No 135A
INSTRUMENT No 2981
(RECORDED 10/05/1972)
PERMANENT EASEMENT
20.00'
GERMAIN STREET
O.R. D6043-845
(PORTION OF APN
2723-009-903)
LARWIN AVENUE
MATCH LINE
SEE ABOVE RIGHT
NW 1/4 SECTION 13
T2N, R17W, SBM
LINE TABLE:
A N89°44'19"W 21.36'
1 N0°01'18"E 79.41'
2 WEST 365.82'
3 S45°00'17"W 130.70'
4 WEST 434.53'
5 N45°03'51"W 68.34'
6 N89°44'00"W 153.48'
7 S66°29'51"W 44.71'
8 N89°45'41"W 147.02'
9 S61°04'48"W 20.42'
EASEMENT LEGEND:
1 PERMANENT EASEMENT TO M.W.D. PER O.R. 77-679016
2 PERMANENT EASEMENT TO C.M.W.D. PER O.R. D2582-733
SCALE: 1"=100'
EXHIBIT "B-5"
SKETCH TO ACCOMPANY LEGAL DESCRIPTION FOR PERMANENT EASEMENT
PREPARED BY:
BENNER AND CARPENTER, INC.
506 EAST MAIN STREET
SANTA PAULA, CA 93060
(805) 525-3396

EXHIBIT "A-6"

LEGAL DESCRIPTION

FOR TEMPORARY EASEMENT

(PORTION OF APN 2723-009-903)

Being a strip of land, 10.00 feet wide, in the City of Los Angeles, County of Los Angeles, State of California, over a portion of the Northeast Quarter of Section 13, Township 2 North, Range 17 West, San Bernardino Meridian, said strip of land being adjacent and northerly, northwesterly and northeasterly of a strip of land, 20.00 feet wide, the centerline of said 20.00 foot wide strip of land described as follows:

Beginning at a point in the southerly line of the lands described in Resolution No. 2529, recorded July 3, 1958, as Instrument No. 1112 of Official Records of Los Angeles County, said point bears North 89°44'19" West 21.36 feet from the southeasterly corner of said lands; thence,

1st: North 0°01'18" East 79.41 feet; thence.
2nd: West 365.82 feet; thence,
3rd: South 45°00'17" West 130.70 feet; thence,
4th: West 434.53 feet; thence,
5th: North 45°03'51" West 68.34 feet; thence,
6th: North 89°44'00" West 153.48 feet; thence,
7th: South 66°29'51" West 44.71 feet; thence,
8th: North 89°45'41" West 147.02 feet; thence,
9th: South 61°04'48" West 20.42 feet to the intersection with the East line of the Northwest Quarter of said Section 13.

EXCEPTING THEREFROM any portion of said 10.00 foot wide strip of land which does not lie within that portion of said Resolution No. 2529 which lies westerly of Parcel No. 135A, as described in the Judgment and Final Order of Condemnation recorded October 5, 1972, as Instrument No. 2981 of Official Records of Los Angeles County.

Containing 10,373 square feet, more or less.

Larry Frager 6/1/22

Larry J. Frager, P.L.S. 7998 Date

PROFESSIONAL LAND SURVEYOR
LARRY J FRAGER
No. 7998
STATE OF CALIFORNIA

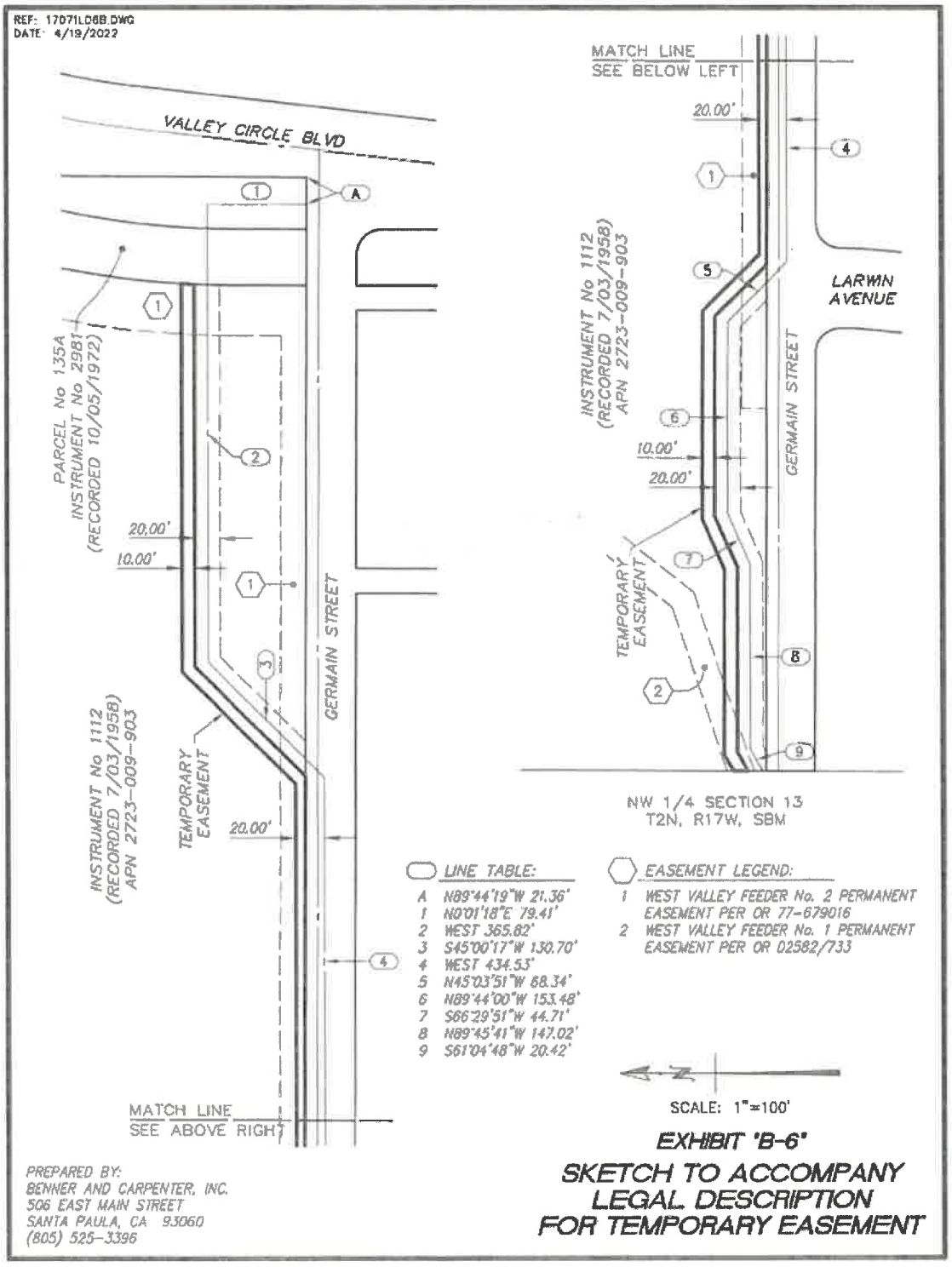
REF: 17071LD6B.DWG
DATE: 4/19/2022
VALLEY CIRCLE BLVD
PARCEL No 135A
INSTRUMENT No 2981
(RECORDED 10/05/1972)
INSTRUMENT No 1112
(RECORDED 7/03/1958)
APN 2723-009-903
TEMPORARY EASEMENT
GERMAIN STREET
20.00'
10.00'
MATCH LINE
SEE ABOVE RIGHT
MATCH LINE
SEE BELOW LEFT
LARWIN AVENUE
NW 1/4 SECTION 13
T2N, R17W, SBM
LINE TABLE:
A N89°44'19"W 21.36'
1 N0°01'18"E 79.41'
2 WEST 365.82'
3 S45°00'17"W 130.70'
4 WEST 434.53'
5 N45°03'51"W 68.34'
6 N89°44'00"W 153.48'
7 S66°29'51"W 44.71'
8 N89°45'41"W 147.02'
9 S61°04'48"W 20.42'
EASEMENT LEGEND:
1 WEST VALLEY FEEDER No. 2 PERMANENT EASEMENT PER OR 77-679016
2 WEST VALLEY FEEDER No. 1 PERMANENT EASEMENT PER OR 02582/733
SCALE: 1"=100'
EXHIBIT "B-6"
SKETCH TO ACCOMPANY LEGAL DESCRIPTION FOR TEMPORARY EASEMENT
PREPARED BY:
BENNER AND CARPENTER, INC.
506 EAST MAIN STREET
SANTA PAULA, CA 93060
(805) 525-3396

EXHIBIT "A-2"

LEGAL DESCRIPTION
FOR TEMPORARY EASEMENT
(PORTION OF APN 2723-009-903)

That portion of the Northeast Quarter of Section 13, Township 2 North, Range 17 West, San Bernardino Meridian, in the City of Los Angeles, County of Los Angeles, State of California, described as follows:

Beginning at the southeasterly corner of the lands described in Resolution No. 2529, recorded July 3, 1958, as Instrument No. 1112 of Official Records of Los Angeles County; thence along the southerly line of said lands,

1st: North 89°44'19" West 41.34 feet to the intersection with the easterly line of Parcel No. 135A, as described in the Judgment and Final Order of Condemnation recorded October 5, 1972, as Instrument No 2981 of Official Records of Los Angeles County; thence along said easterly line by the following two courses:

2nd: North 0°01'31" East 58.78 feet to the beginning of a tangent curve, concave easterly and having a radius of 645.00 feet; thence,

3rd: Northerly along said curve an arc distance of 50.59 feet through a central angle of 4°29'39"; thence non-tangent to said curve,

4th: East 39.90 feet to the intersection with the easterly line of said Resolution No. 2529; thence along said easterly line,

5th: South 0°18'37" West 109.51 feet to the point of beginning of this description.

EXCEPTING THEREFROM a strip of land, 20.00 feet wide, the centerline of which described as follows: Beginning at a point in the southerly line of said Resolution No. 2529 which bears North 89°44'19" West 21.36 feet from the southeasterly corner of said land; thence,

1st: North 0°01'18" East 79.41 feet; thence,

2nd: West 19.65 feet to the intersection with the easterly line of said Parcel No. 135A.

The sidelines of said strip of land to be lengthened or shortened to terminate southerly in said southerly

line of Resolution No. 2529, and westerly in said easterly line of Parcel No. 135A.

Containing 2,539 square feet, more or less.

Larry J. Frager, P.L.S. 7998 — Date 6/1/22



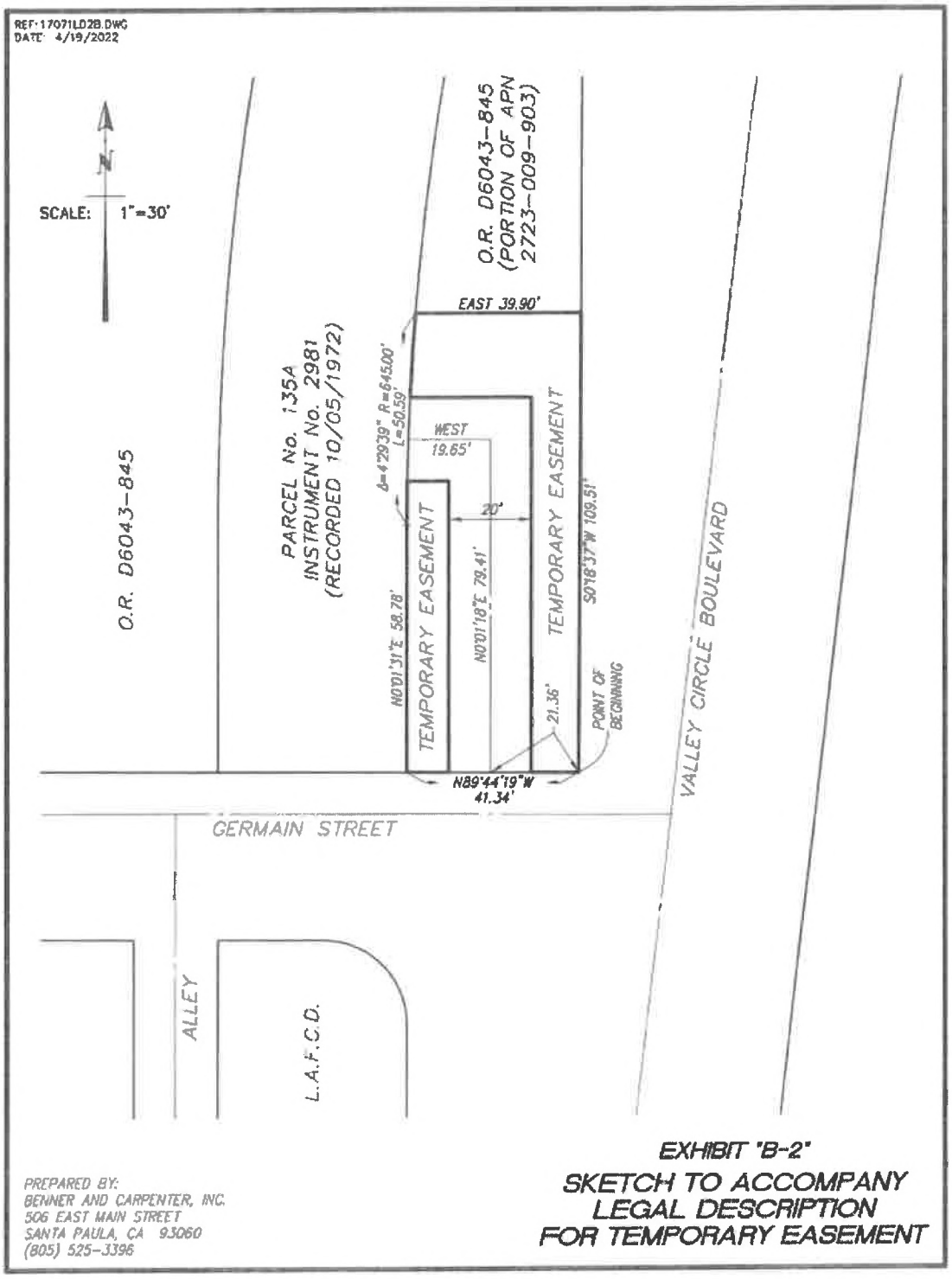
REF: 17071LD2B.DWG
DATE: 4/19/2022
N
SCALE: 1"=30'
O.R. D6043-845
PARCEL No. 135A
INSTRUMENT No. 2981
(RECORDED 10/05/1972)
O.R. D6043-845
(PORTION OF APN
2723-009-903)
EAST 39.90'
Δ=4°29'39" R=645.00'
L=50.59'
WEST
19.65'
20'
TEMPORARY EASEMENT
TEMPORARY EASEMENT
N0°01'31"E 58.78'
N0°01'18"E 79.41'
S0°16'37"W 109.51'
21.36'
POINT OF
BEGINNING
N89°44'19"W
41.34'
VALLEY CIRCLE BOULEVARD
GERMAIN STREET
ALLEY
L.A.F.C.D.
PREPARED BY:
BENNER AND CARPENTER, INC.
506 EAST MAIN STREET
SANTA PAULA, CA 93060
(805) 525-3396
EXHIBIT "B-2"
SKETCH TO ACCOMPANY
LEGAL DESCRIPTION
FOR TEMPORARY EASEMENT

EXHIBIT "A-20"

LEGAL DESCRIPTION
FOR TEMPORARY EASEMENT
(PORTION OF APN 2723-010-904)

Being a strip of land, 10.00 feet wide, in the City of Los Angeles, County of Los Angeles, State of California, over a portion of the Northwest Quarter of Section 13, Township 2 North, Range 17 West, San Bernardino Meridian, said strip of land being adjacent and southeasterly, southerly and westerly of a strip of land, 30.00 feet wide, the centerline of said 30.00 foot wide strip of land described as follows:

Beginning at a point in the southerly line of the lands described in Resolution No. 2529, recorded July 3, 1958, as Instrument No. 1112 of Official Records of Los Angeles County, said point bears North 89°44'19" West 21.36 feet from the southeasterly corner of said lands; thence North 0°01'18" East 79.41 feet; thence West 365.82 feet; thence South 45°00'17" West 130.70 feet; thence West 434.53 feet; thence North 45°03'51" West 68.34 feet; thence North 89°44'00" West 153.48 feet; thence South 66°29'51" West 44.71 feet; thence North 89°45'41" West 147.02 feet; thence South 61°04'48" West 94.58 feet; thence South 89°23'52" West 43.57 feet; thence South 45°09'38" West 225.76 feet; thence South 53°52'19" West 69.40 feet, along a line hereinafter referred to as "Line A", to the intersection with the westerly line of the lands described in the Grant Deed recorded January 24, 1991, as Instrument No. 91-103605 of Official Records of Los Angeles County; thence along said westerly line South 0°18'32" West 6.22 feet to the intersection with a line, parallel with and 5.00 feet southeasterly of, measured at right angles, "Line A" hereinabove described, said point being the True Point of Beginning of this description; thence along said parallel line,

1st: South 53°52'19" West 142.05 feet; thence,
2nd: North 88°55'57" West 435.95 feet; thence,
3rd: North 70°38'05" West 56.94 feet; thence,
4th: South 87°50'39" West 47.00 feet; thence,
5th: North 65°57'11" West 159.30 feet; thence,
6th: North 75°16'19" West 283.27 feet; thence,
7th: North 9°00'00" East 240.35 feet to the intersection with the southerly line of the lands described in the Grant Deed recorded May 26, 1966, as Instrument No. 3387 in Book D3317, Page 835 of Official Records of Los Angeles County.

The sidelines of said strip of land to be lengthened or shortened to terminate northerly in the southerly line of said Instrument No. 3387.

EXCEPTING THEREFROM any portion of said 10.00 foot wide strip of land which does not lie within the lands described in the Grant Deed recorded June 27, 1966, as Instrument No. 2656 of Official Records of Los Angeles County.

Containing 10,538 square feet, more or less.

Larry J. Frager, P.L.S. 7998 — Date 6/1/22

PROFESSIONAL LAND SURVEYOR
LARRY J FRAGER
No. 7998
STATE OF CALIFORNIA

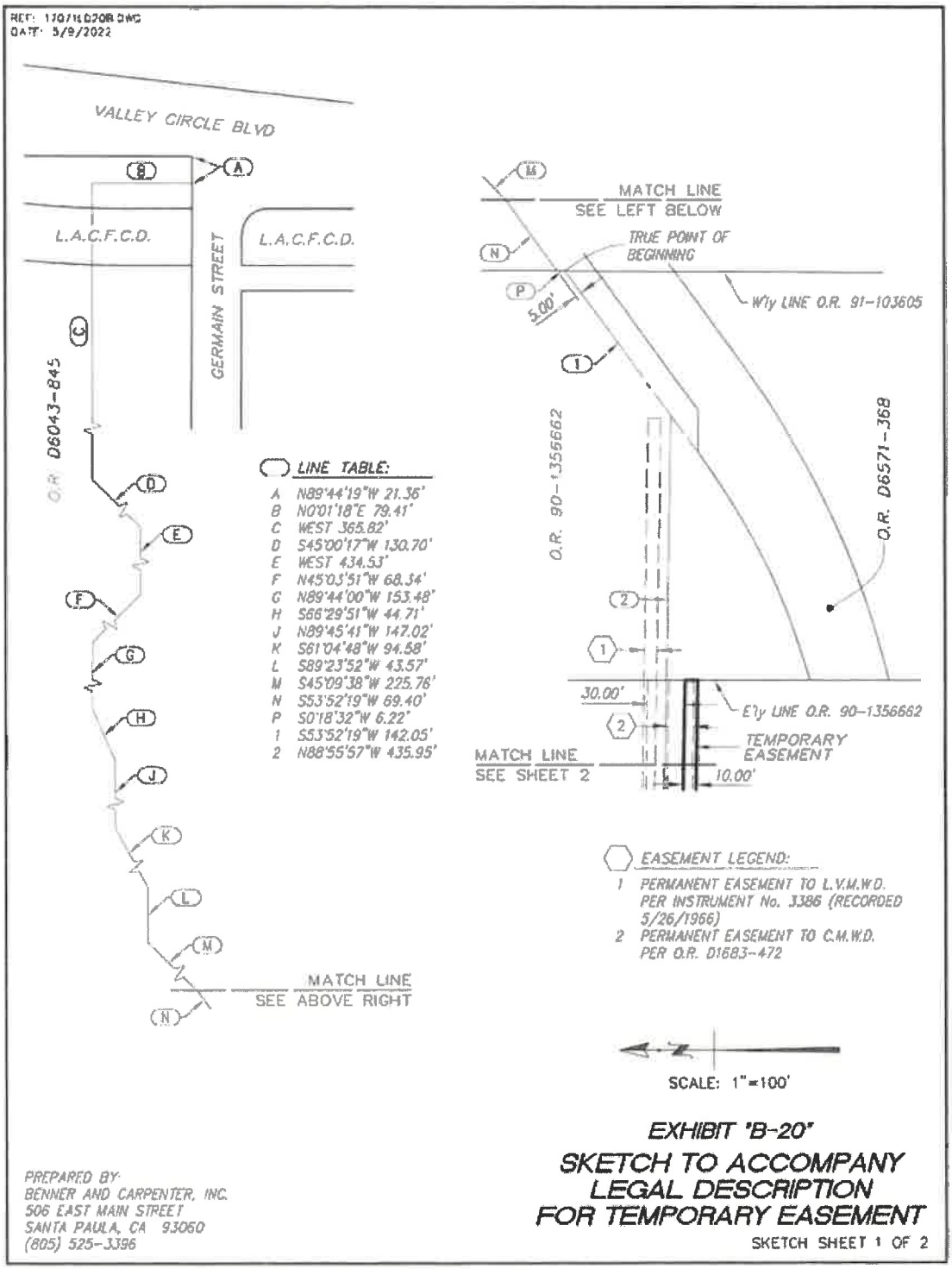
REF: 17071LD20B.DWG
DATE: 3/9/2022
VALLEY CIRCLE BLVD
L.A.C.F.C.D.
GERMAIN STREET
L.A.C.F.C.D.
O.R. D6043-845
LINE TABLE:
A N89°44'19"W 21.36'
B N0°01'18"E 79.41'
C WEST 365.82'
D S45°00'17"W 130.70'
E WEST 434.53'
F N45°03'51"W 68.34'
G N89°44'00"W 153.48'
H S66°29'51"W 44.71'
J N89°45'41"W 147.02'
K S61°04'48"W 94.58'
L S89°23'52"W 43.57'
M S45°09'38"W 225.76'
N S53°52'19"W 69.40'
P S0°18'32"W 6.22'
1 S53°52'19"W 142.05'
2 N88°55'57"W 435.95'
MATCH LINE
SEE ABOVE RIGHT
MATCH LINE
SEE LEFT BELOW
TRUE POINT OF BEGINNING
5.00'
Wly LINE O.R. 91-103605
O.R. 90-1356662
O.R. D6571-368
30.00'
Ely LINE O.R. 90-1356662
TEMPORARY EASEMENT
10.00'
MATCH LINE
SEE SHEET 2
EASEMENT LEGEND:
1 PERMANENT EASEMENT TO L.V.M.W.D. PER INSTRUMENT No. 3386 (RECORDED 5/26/1966)
2 PERMANENT EASEMENT TO C.M.W.D. PER O.R. D1683-472
SCALE: 1"=100'
EXHIBIT "B-20"
SKETCH TO ACCOMPANY
LEGAL DESCRIPTION
FOR TEMPORARY EASEMENT
SKETCH SHEET 1 OF 2
PREPARED BY:
BENNER AND CARPENTER, INC.
506 EAST MAIN STREET
SANTA PAULA, CA 93060
(805) 525-3396

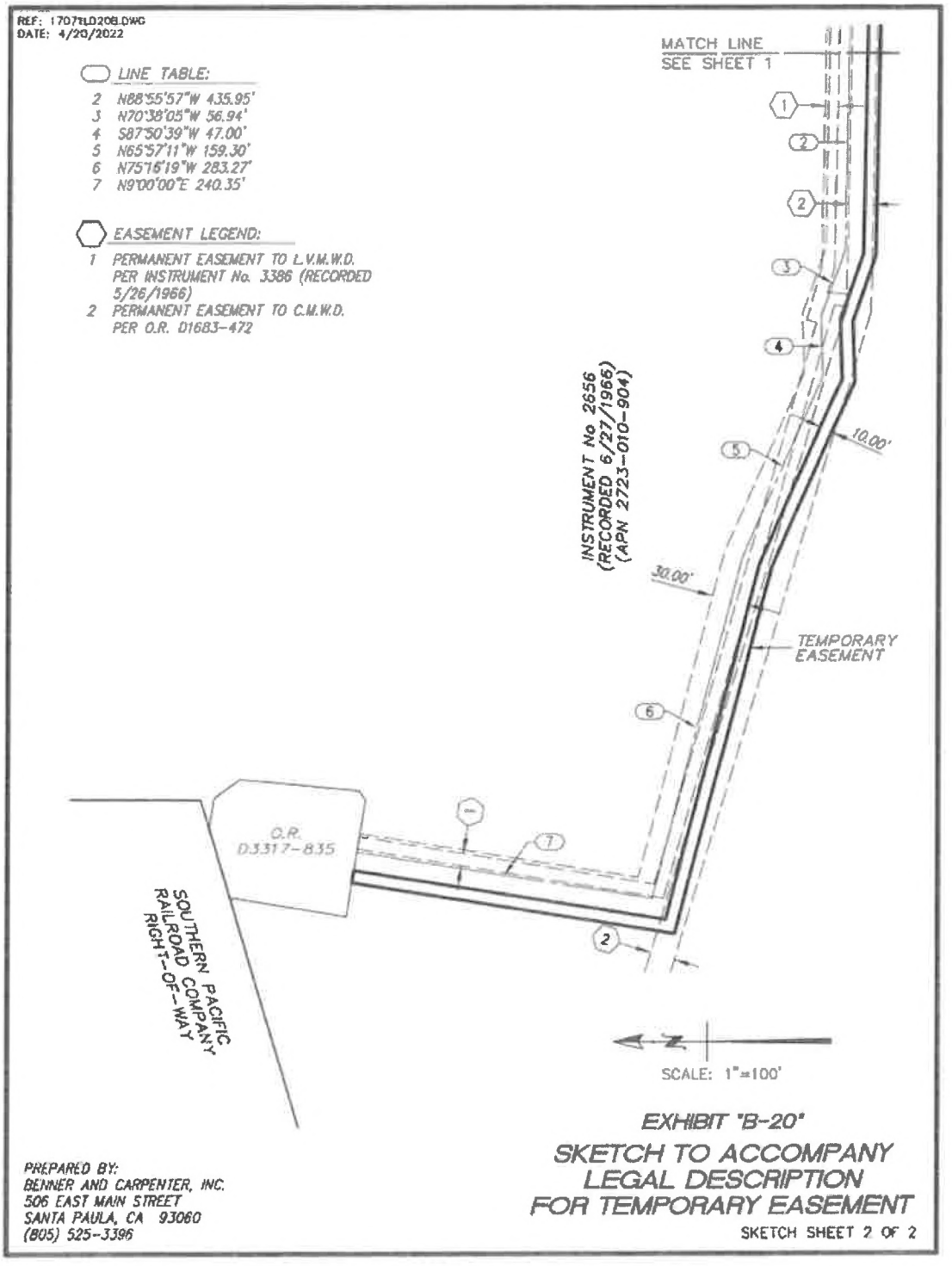
REF: 1707ELD208.DWG
DATE: 4/20/2022
LINE TABLE:
2 N88°55'57"W 435.95'
3 N70°38'05"W 56.94'
4 S87°50'39"W 47.00'
5 N65°57'11"W 159.30'
6 N75°16'19"W 283.27'
7 N9°00'00"E 240.35'
EASEMENT LEGEND:
1 PERMANENT EASEMENT TO L.V.M.W.D. PER INSTRUMENT No. 3386 (RECORDED 5/26/1966)
2 PERMANENT EASEMENT TO C.M.W.D. PER O.R. 01683-472
MATCH LINE SEE SHEET 1
INSTRUMENT No 2656 (RECORDED 6/27/1966) (APN 2723-010-904)
10.00'
30.00'
TEMPORARY EASEMENT
O.R. 03317-835
SOUTHERN PACIFIC RAILROAD COMPANY RIGHT-OF-WAY
SCALE: 1"=100'
EXHIBIT "B-20"
SKETCH TO ACCOMPANY LEGAL DESCRIPTION FOR TEMPORARY EASEMENT
SKETCH SHEET 2 OF 2
PREPARED BY:
BENNER AND CARPENTER, INC.
506 EAST MAIN STREET
SANTA PAULA, CA 93060
(805) 525-3396

EXHIBIT "A-19"

LEGAL DESCRIPTION
FOR PERMANENT EASEMENT
(PORTION OF APN 2723-010-904)

Being a strip of land, 30.00 feet wide, in the City of Los Angeles, County of Los Angeles, State of California, over a portion of the Northwest Quarter of Section 13, Township 2 North, Range 17 West, San Bernardino Meridian, the centerline of said strip of land described as follows:

Beginning at a point in the southerly line of the lands described in Resolution No. 2529, recorded July 3, 1958, as Instrument No. 1112 of Official Records of Los Angeles County, said point bears North 89°44'19" West 21.36 feet from the southeasterly corner of said lands; thence North 0°01'18" East 79.41 feet; thence West 365.82 feet; thence South 45°00'17" West 130.70 feet; thence West 434.53 feet; thence North 45°03'51" West 68.34 feet; thence North 89°44'00" West 153.48 feet; thence South 66°29'51" West 44.71 feet; thence North 89°45'41" West 147.02 feet; thence South 61°04'48" West 94.58 feet; thence South 89°23'52" West 43.57 feet; thence South 45°09'38" West 225.76 feet; thence South 53°52'19" West 69.40 feet, along a line hereinafter referred to as "Line A", to the intersection with the westerly line of the lands described in the Grant Deed recorded January 24, 1991, as Instrument No. 91-103605 of Official Records of Los Angeles County; thence along said westerly line South 0°18'32" West 6.22 feet to the intersection with a line, parallel with and 5.00 feet southeasterly of, measured at right angles, "Line A" hereinabove described, said point being the True Point of Beginning of this description; thence along said parallel line,

1st: South 53°52'19" West 142.05 feet; thence,
2nd: North 88°55'57" West 435.95 feet; thence,
3rd: North 70°38'05" West 56.94 feet; thence,
4th: South 87°50'39" West 47.00 feet; thence,
5th: North 65°57'11" West 159.30 feet; thence,
6th: North 75°16'19" West 283.27 feet; thence,
7th: North 9°00'00" East 240.35 feet to the intersection with southerly line of the lands described in the Grant Deed recorded May 26, 1966, as Instrument No. 3387 in Book D3317, Page 835 of Official Records of Los Angeles County.

The sidelines of said strip of land to be lengthened or shortened to terminate northerly in the southerly line of said Instrument No. 3387.

EXCEPTING THEREFROM any portion of said strip of land which does not lie within the lands described in the Grant Deed recorded June 27, 1966, as Instrument No. 2656 of Official Records of Los Angeles County.

Containing 30,368 square feet, more or less.

Larry J. Frager, P.L.S. 7998 — Date 6/1/22

PROFESSIONAL LAND SURVEYOR
LARRY J FRAGER
No. 7998
STATE OF CALIFORNIA

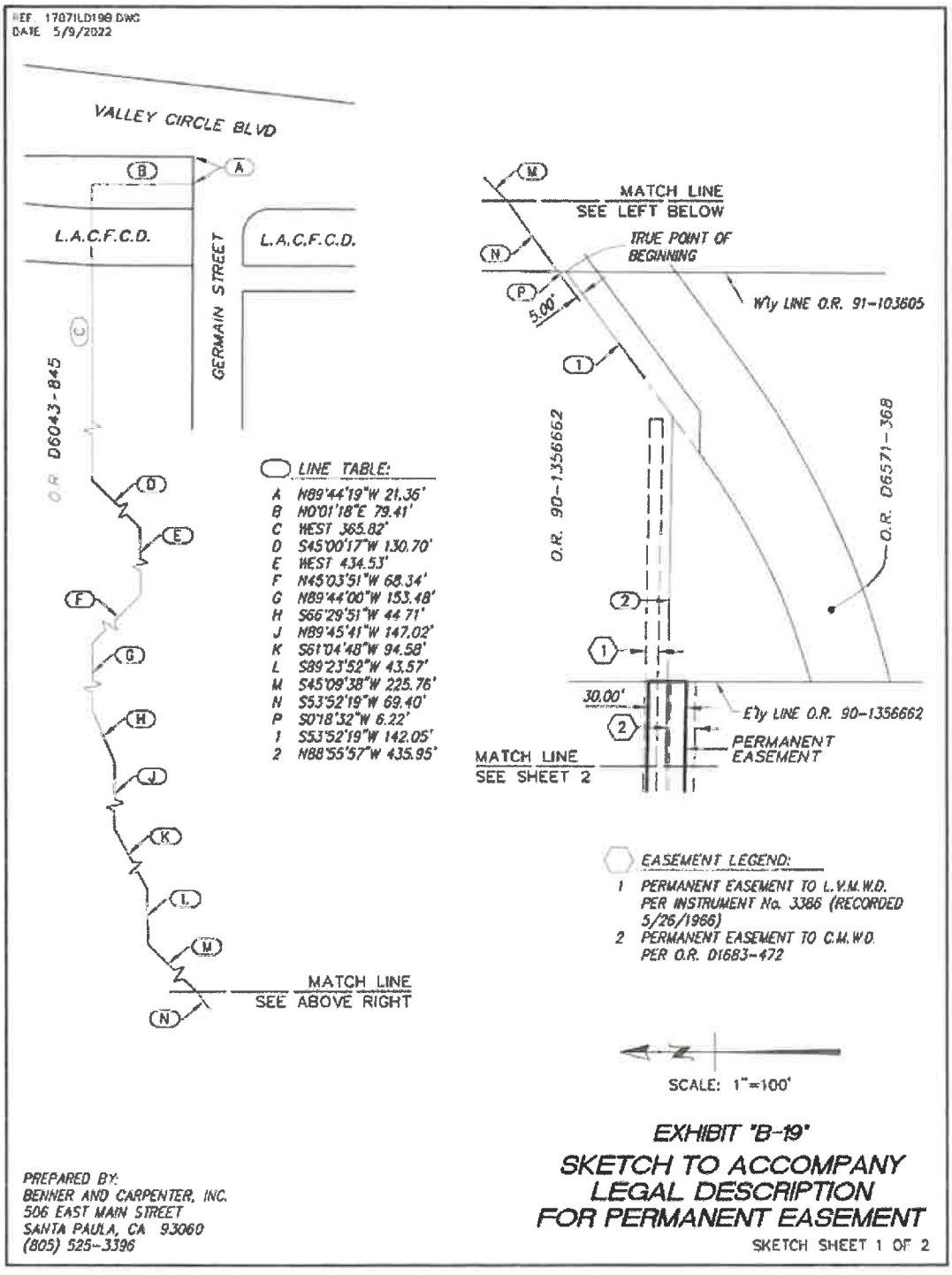
REF 1787ILD19B.DWG
DATE 5/9/2022
VALLEY CIRCLE BLVD
L.A.C.F.C.D.
GERMAIN STREET
L.A.C.F.C.D.
O.R. D6043-845
LINE TABLE:
A N89°44'19"W 21.36'
B N0°01'18"E 79.41'
C WEST 365.82'
D S45°00'17"W 130.70'
E WEST 434.53'
F N45°03'51"W 68.34'
G N89°44'00"W 153.48'
H S66°29'51"W 44.71'
J N89°45'41"W 147.02'
K S61°04'48"W 94.58'
L S89°23'52"W 43.57'
M S45°09'38"W 225.76'
N S53°52'19"W 69.40'
P S0°18'32"W 6.22'
1 S53°52'19"W 142.05'
2 N88°55'57"W 435.95'
MATCH LINE
SEE ABOVE RIGHT
MATCH LINE
SEE LEFT BELOW
TRUE POINT OF BEGINNING
5.00'
Wly LINE O.R. 91-103605
O.R. 90-1356662
O.R. D6571-368
30.00'
Ely LINE O.R. 90-1356662
PERMANENT EASEMENT
MATCH LINE
SEE SHEET 2
EASEMENT LEGEND:
1 PERMANENT EASEMENT TO L.V.M.W.D. PER INSTRUMENT No. 3386 (RECORDED 5/26/1966)
2 PERMANENT EASEMENT TO C.M.W.D. PER O.R. 01683-472
SCALE: 1"=100'
EXHIBIT "B-19"
SKETCH TO ACCOMPANY LEGAL DESCRIPTION FOR PERMANENT EASEMENT
SKETCH SHEET 1 OF 2
PREPARED BY:
BENNER AND CARPENTER, INC.
506 EAST MAIN STREET
SANTA PAULA, CA 93060
(805) 525-3396

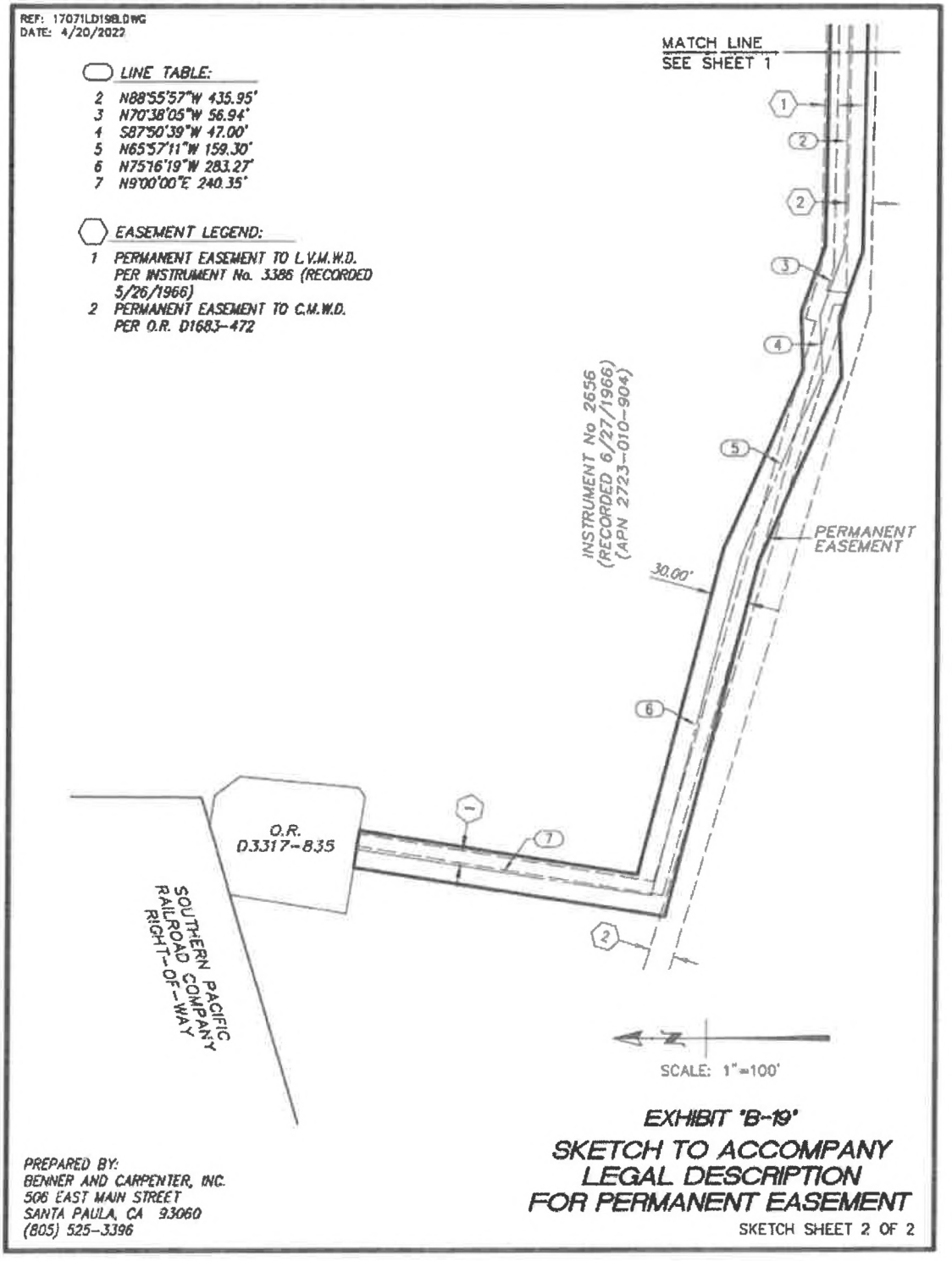
REF: 17071LD19BLD.DWG
DATE: 4/20/2022
LINE TABLE:
2 N88°55'57"W 435.95'
3 N70°38'05"W 56.94'
4 S87°50'39"W 47.00'
5 N65°57'11"W 159.30'
6 N75°16'19"W 283.27'
7 N9°00'00"E 240.35'
EASEMENT LEGEND:
1 PERMANENT EASEMENT TO L.V.M.W.D. PER INSTRUMENT No. 3386 (RECORDED 5/26/1966)
2 PERMANENT EASEMENT TO C.M.W.D. PER O.R. D1683-472
MATCH LINE SEE SHEET 1
INSTRUMENT No 2656 (RECORDED 6/27/1966) (APN 2723-010-904)
PERMANENT EASEMENT
30.00'
O.R. D3317-835
SOUTHERN PACIFIC RAILROAD COMPANY RIGHT-OF-WAY
SCALE: 1"=100'
EXHIBIT "B-19"
SKETCH TO ACCOMPANY LEGAL DESCRIPTION FOR PERMANENT EASEMENT
SKETCH SHEET 2 OF 2
PREPARED BY:
BENNER AND CARPENTER, INC.
506 EAST MAIN STREET
SANTA PAULA, CA 93060
(805) 525-3396

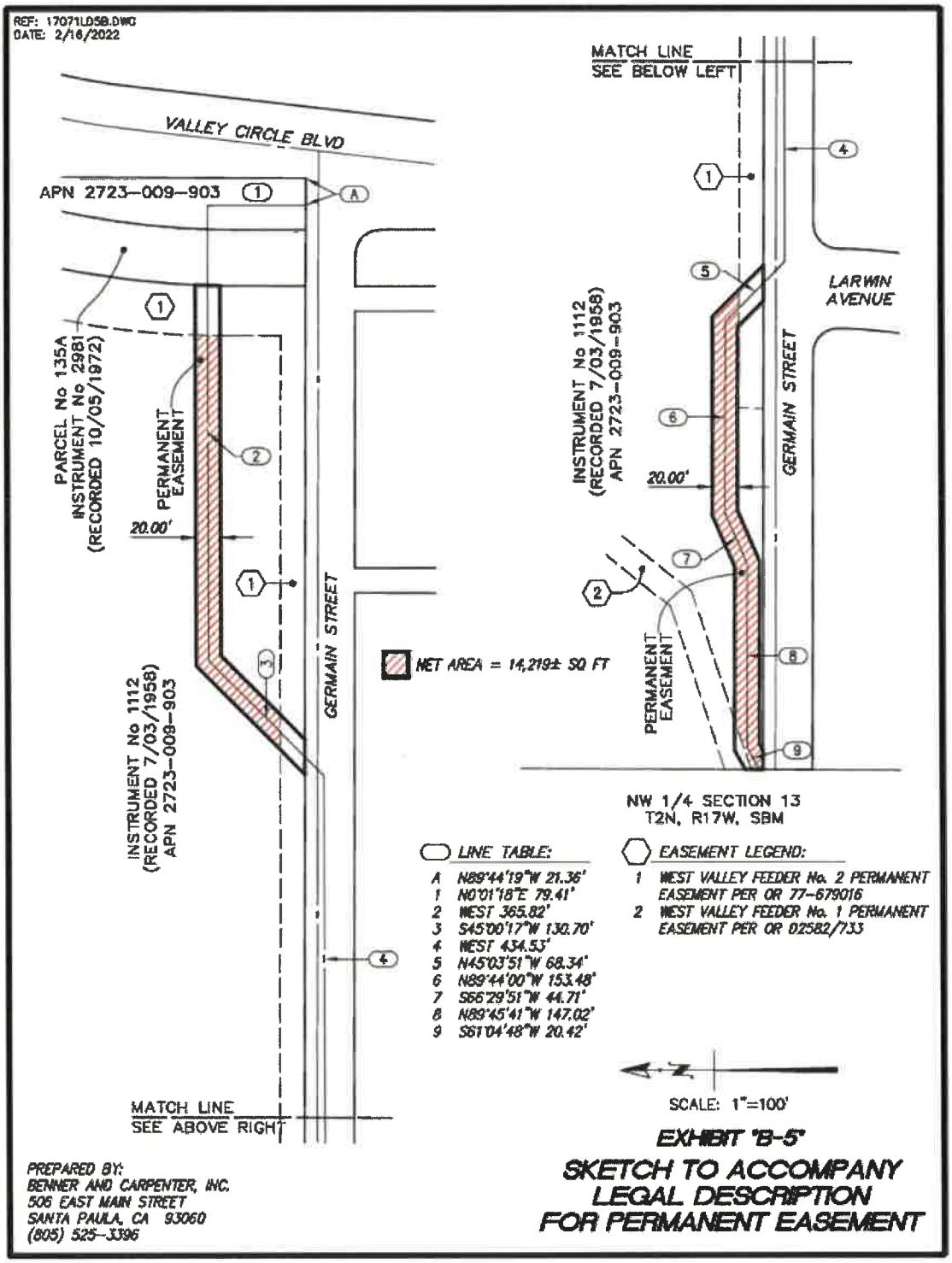
REF: 17071L05B.DWG
DATE: 2/16/2022
VALLEY CIRCLE BLVD
APN 2723-009-903
PARCEL No 135A
INSTRUMENT No 2981
(RECORDED 10/05/1972)
PERMANENT EASEMENT
20.00'
INSTRUMENT No 1112
(RECORDED 7/03/1958)
APN 2723-009-903
GERMAIN STREET
MET AREA = 14,219± SQ FT
MATCH LINE
SEE ABOVE RIGHT
MATCH LINE
SEE BELOW LEFT
LARWIN AVENUE
NW 1/4 SECTION 13
T2N, R17W, SBM
LINE TABLE:
A N89°44'19"W 21.36'
1 N0°01'18"E 79.41'
2 WEST 365.82'
3 S45°00'17"W 130.70'
4 WEST 434.53'
5 N45°03'51"W 68.34'
6 N89°44'00"W 153.48'
7 S66°29'51"W 44.71'
8 N89°45'41"W 147.02'
9 S61°04'48"W 20.42'
EASEMENT LEGEND:
1 WEST VALLEY FEEDER No. 2 PERMANENT EASEMENT PER OR 77-679016
2 WEST VALLEY FEEDER No. 1 PERMANENT EASEMENT PER OR 02582/733
SCALE: 1"=100'
EXHIBIT "B-5"
SKETCH TO ACCOMPANY LEGAL DESCRIPTION FOR PERMANENT EASEMENT
PREPARED BY:
BENNER AND CARPENTER, INC.
506 EAST MAIN STREET
SANTA PAULA, CA 93060
(805) 525-3396

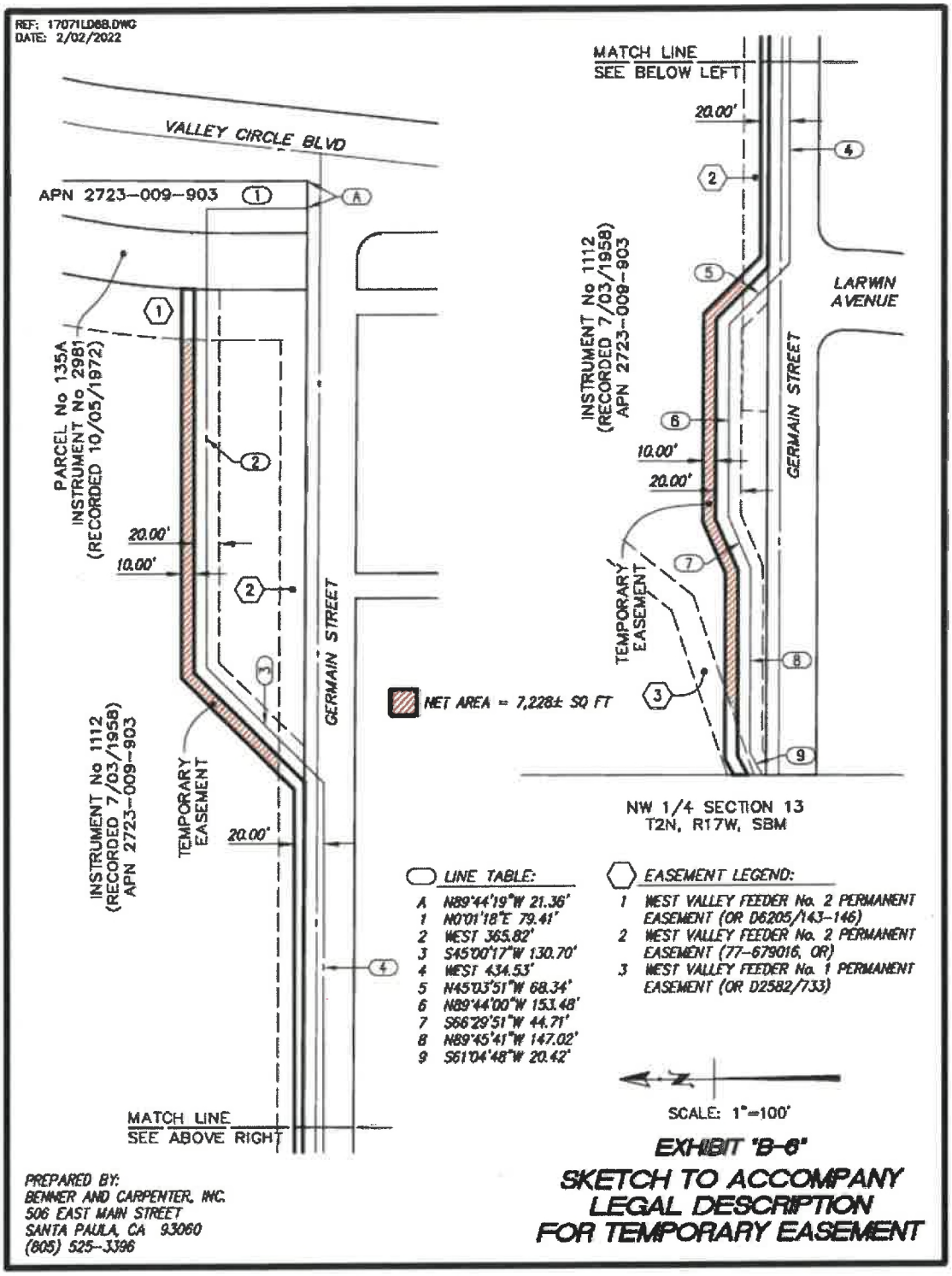
REF: 17071LD6B.DWG
DATE: 2/02/2022
VALLEY CIRCLE BLVD
APN 2723-009-903
PARCEL No 135A
INSTRUMENT No 2981
(RECORDED 10/05/1972)
INSTRUMENT No 1112
(RECORDED 7/03/1958)
APN 2723-009-903
TEMPORARY EASEMENT
GERMAIN STREET
20.00'
10.00'
MATCH LINE
SEE ABOVE RIGHT
MATCH LINE
SEE BELOW LEFT
LARWIN AVENUE
NET AREA = 7,228± SQ FT
NW 1/4 SECTION 13
T2N, R17W, SBM
LINE TABLE:
A N89°44'19"W 21.36'
1 N0°01'18"E 79.41'
2 WEST 365.82'
3 S45°00'17"W 130.70'
4 WEST 434.53'
5 N45°03'51"W 68.34'
6 N89°44'00"W 153.48'
7 S66°29'51"W 44.71'
8 N89°45'41"W 147.02'
9 S61°04'48"W 20.42'
EASEMENT LEGEND:
1 WEST VALLEY FEEDER No. 2 PERMANENT EASEMENT (OR D6205/143-146)
2 WEST VALLEY FEEDER No. 2 PERMANENT EASEMENT (77-679016, OR)
3 WEST VALLEY FEEDER No. 1 PERMANENT EASEMENT (OR D2582/733)
SCALE: 1"=100'
EXHIBIT "B-6"
SKETCH TO ACCOMPANY LEGAL DESCRIPTION FOR TEMPORARY EASEMENT
PREPARED BY:
BENNER AND CARPENTER, INC.
506 EAST MAIN STREET
SANTA PAULA, CA 93060
(805) 525-3396

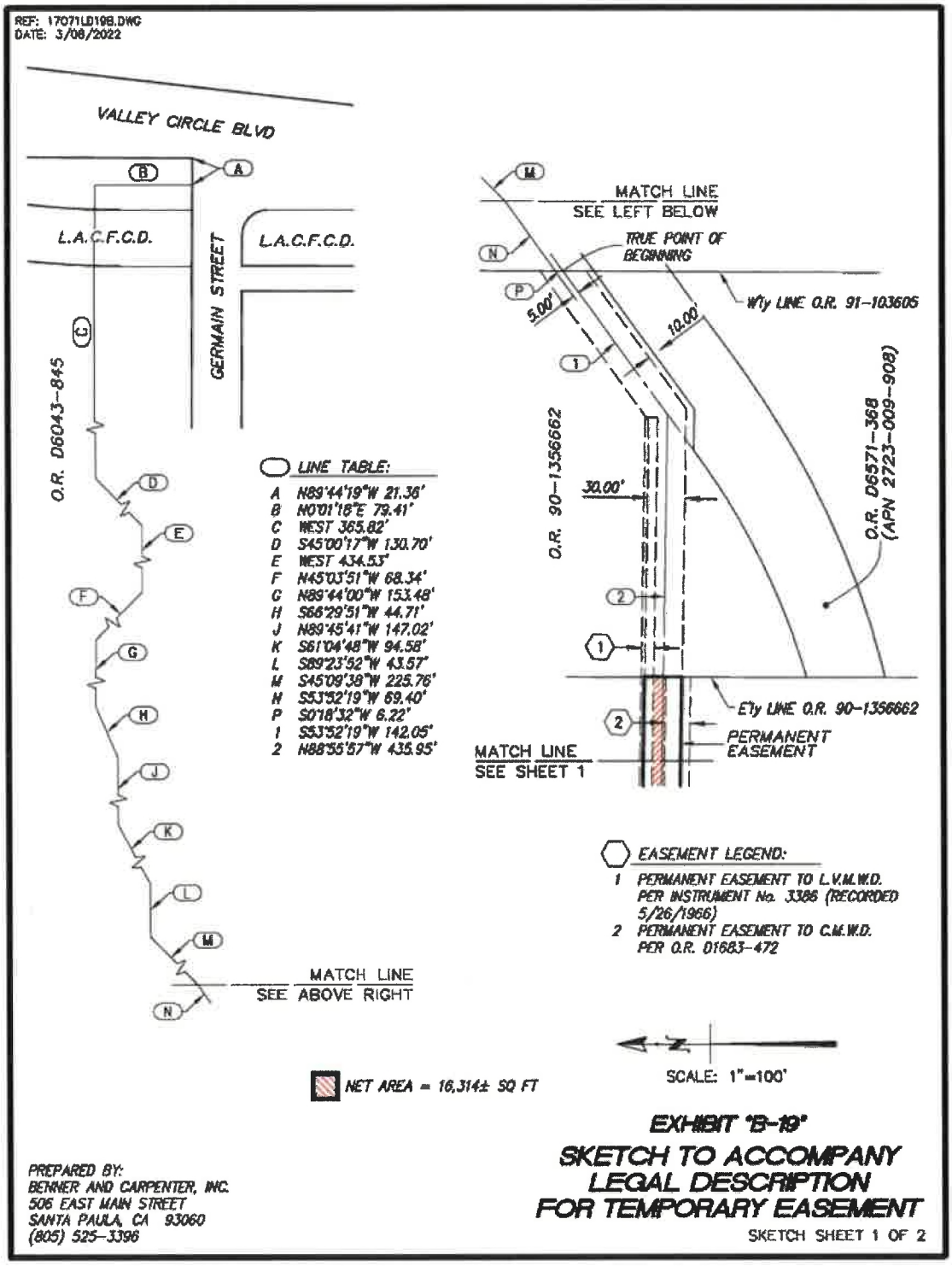
REF: 17071LD19B.DWG
DATE: 3/08/2022
VALLEY CIRCLE BLVD
L.A.C.F.C.D.
L.A.C.F.C.D.
GERMAIN STREET
O.R. D6043-845
LINE TABLE:
A N89°44'19"W 21.36'
B N0°01'18"E 79.41'
C WEST 365.82'
D S45°00'17"W 130.70'
E WEST 434.53'
F N45°03'51"W 68.34'
G N89°44'00"W 153.48'
H S66°29'51"W 44.71'
J N89°45'41"W 147.02'
K S61°04'48"W 94.58'
L S89°23'52"W 43.57'
M S45°09'38"W 225.76'
N S53°52'19"W 69.40'
P S0°18'32"W 6.22'
1 S53°52'19"W 142.05'
2 N88°56'57"W 435.95'
MATCH LINE
SEE ABOVE RIGHT
MATCH LINE
SEE LEFT BELOW
TRUE POINT OF BEGINNING
5.00'
10.00'
W'ly LINE O.R. 91-103605
30.00'
O.R. 90-1356662
O.R. D6571-368
(APN 2723-009-908)
E'ly LINE O.R. 90-1356662
PERMANENT EASEMENT
MATCH LINE
SEE SHEET 1
EASEMENT LEGEND:
1 PERMANENT EASEMENT TO L.V.M.W.D. PER INSTRUMENT No. 3386 (RECORDED 5/26/1966)
2 PERMANENT EASEMENT TO C.M.W.D. PER O.R. D1683-472
NET AREA = 16,314± SQ FT
SCALE: 1"=100'
EXHIBIT "B-19"
SKETCH TO ACCOMPANY LEGAL DESCRIPTION FOR TEMPORARY EASEMENT
SKETCH SHEET 1 OF 2
PREPARED BY:
BENNER AND CARPENTER, INC.
506 EAST MAIN STREET
SANTA PAULA, CA 93060
(805) 525-3396

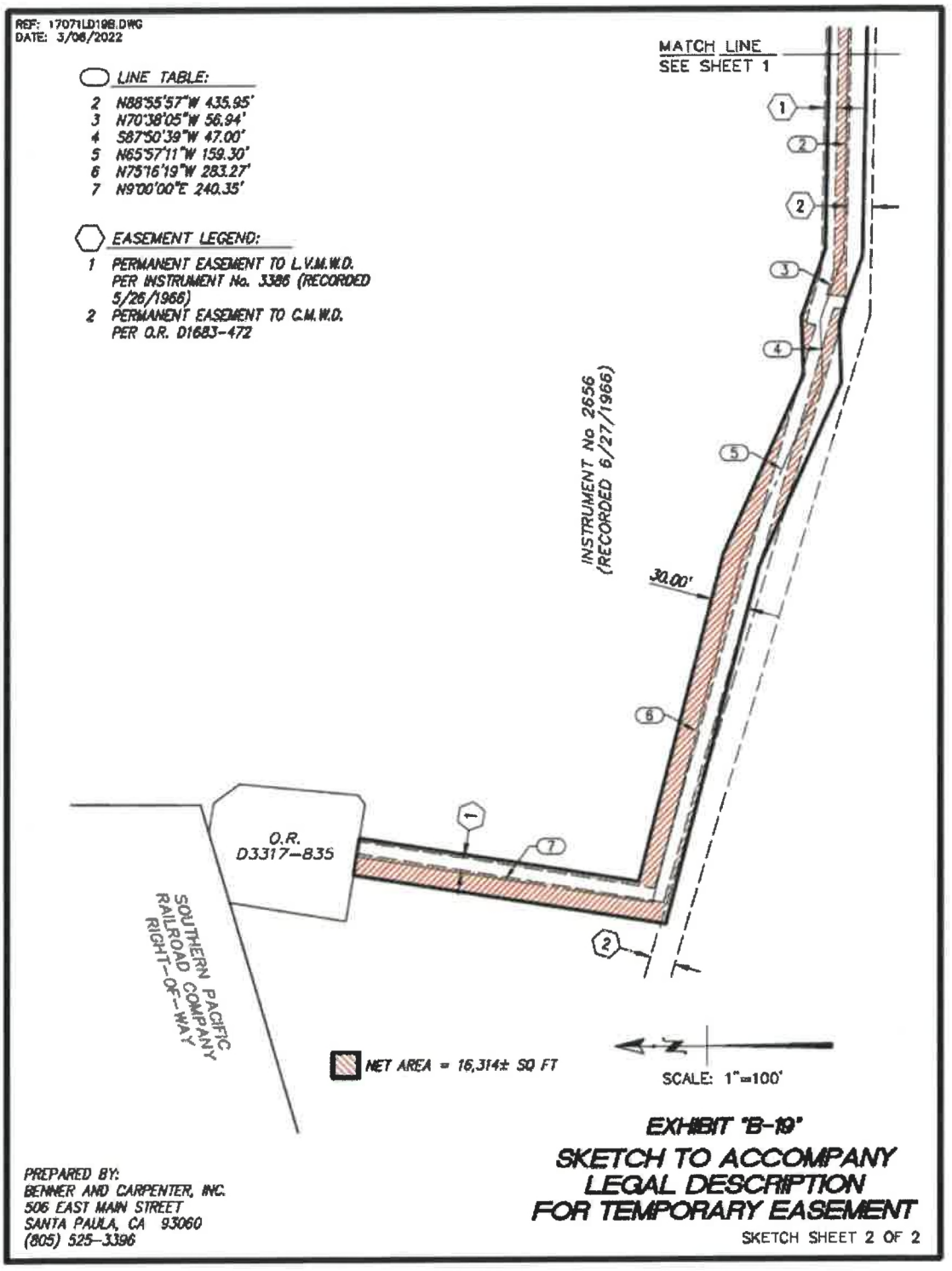
REF: 17071LD19B.DWG
DATE: 3/08/2022
LINE TABLE:
2 N88°55'57"W 435.95'
3 N70°38'05"W 56.94'
4 S87°50'39"W 47.00'
5 N65°57'11"W 159.30'
6 N75°16'19"W 283.27'
7 N9°00'00"E 240.35'
EASEMENT LEGEND:
1 PERMANENT EASEMENT TO L.V.M.W.D. PER INSTRUMENT No. 3386 (RECORDED 5/26/1966)
2 PERMANENT EASEMENT TO C.M.W.D. PER O.R. D1683-472
MATCH LINE SEE SHEET 1
INSTRUMENT No 2656 (RECORDED 6/27/1966)
30.00'
O.R. D3317-835
SOUTHERN PACIFIC RAILROAD COMPANY RIGHT-OF-WAY
NET AREA = 16,314± SQ FT
SCALE: 1"=100'
EXHIBIT "B-19"
SKETCH TO ACCOMPANY LEGAL DESCRIPTION FOR TEMPORARY EASEMENT
SKETCH SHEET 2 OF 2
PREPARED BY:
BENNER AND CARPENTER, INC.
506 EAST MAIN STREET
SANTA PAULA, CA 93060
(805) 525-3396

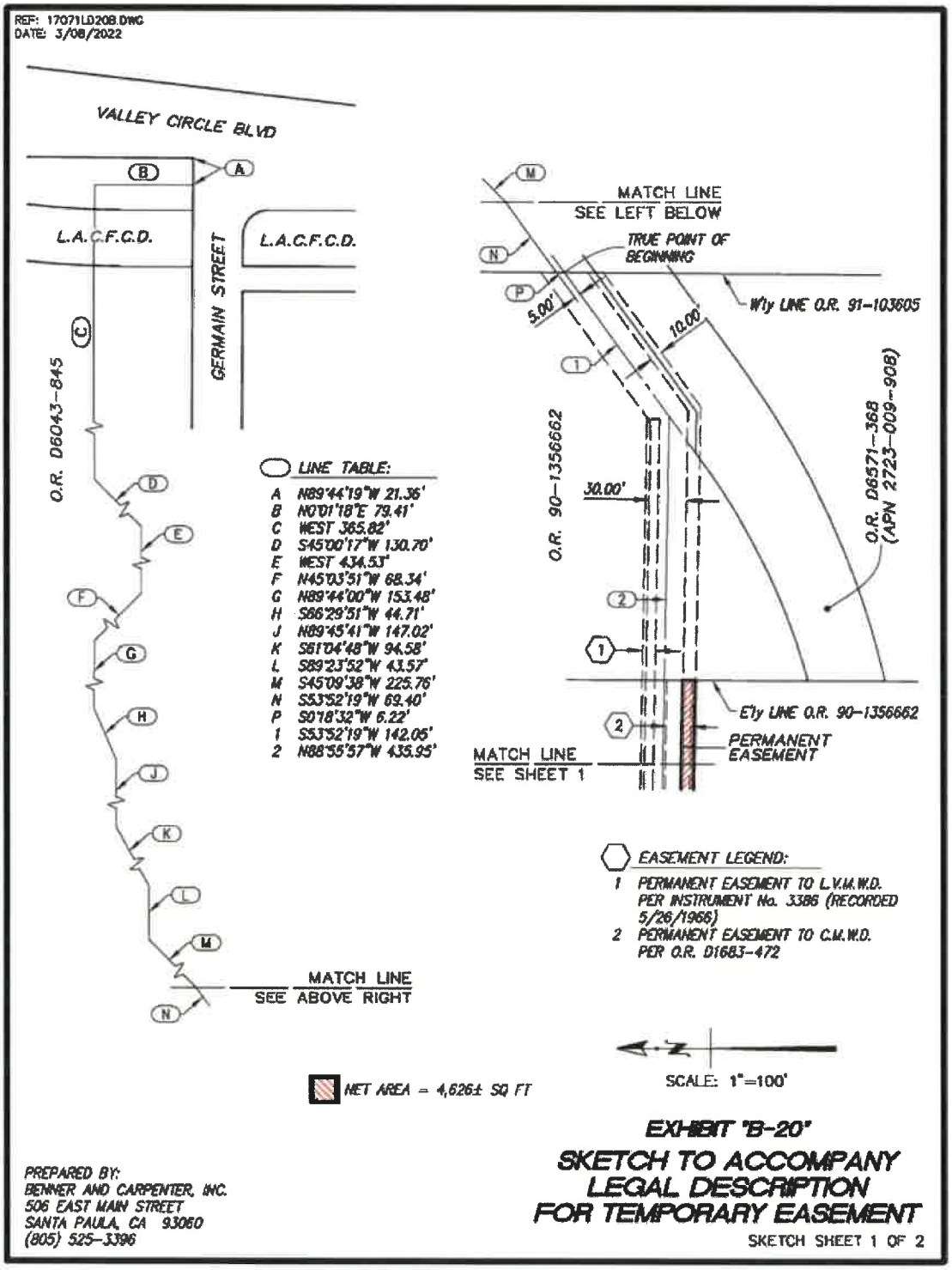
REF: 17071LD20B.DWG
DATE: 3/08/2022
VALLEY CIRCLE BLVD
L.A.C.F.C.D.
GERMAIN STREET
L.A.C.F.C.D.
O.R. D6043-845
MATCH LINE
SEE ABOVE RIGHT
LINE TABLE:
A N89°44'19"W 21.36'
B N0°01'18"E 79.41'
C WEST 365.82'
D S45°00'17"W 130.70'
E WEST 434.53'
F N45°03'51"W 68.34'
G N89°44'00"W 153.48'
H S66°29'51"W 44.71'
J N89°45'41"W 147.02'
K S61°04'48"W 94.58'
L S89°23'52"W 43.57'
M S45°09'38"W 225.76'
N S53°52'19"W 69.40'
P S0°18'32"W 6.22'
1 S53°52'19"W 142.05'
2 N88°55'57"W 435.95'
MATCH LINE
SEE LEFT BELOW
TRUE POINT OF BEGINNING
5.00'
10.00'
W'ly LINE O.R. 91-103605
O.R. 90-1356662
30.00'
O.R. D6571-368
(APN 2723-009-908)
E'ly LINE O.R. 90-1356662
PERMANENT EASEMENT
MATCH LINE
SEE SHEET 1
EASEMENT LEGEND:
1 PERMANENT EASEMENT TO L.V.M.W.D. PER INSTRUMENT No. 3386 (RECORDED 5/26/1966)
2 PERMANENT EASEMENT TO C.M.W.D. PER O.R. D1683-472
NET AREA = 4,626± SQ FT
SCALE: 1"=100'
EXHIBIT "B-20"
SKETCH TO ACCOMPANY LEGAL DESCRIPTION FOR TEMPORARY EASEMENT
SKETCH SHEET 1 OF 2
PREPARED BY:
BENNER AND CARPENTER, INC.
506 EAST MAIN STREET
SANTA PAULA, CA 93060
(805) 525-3396

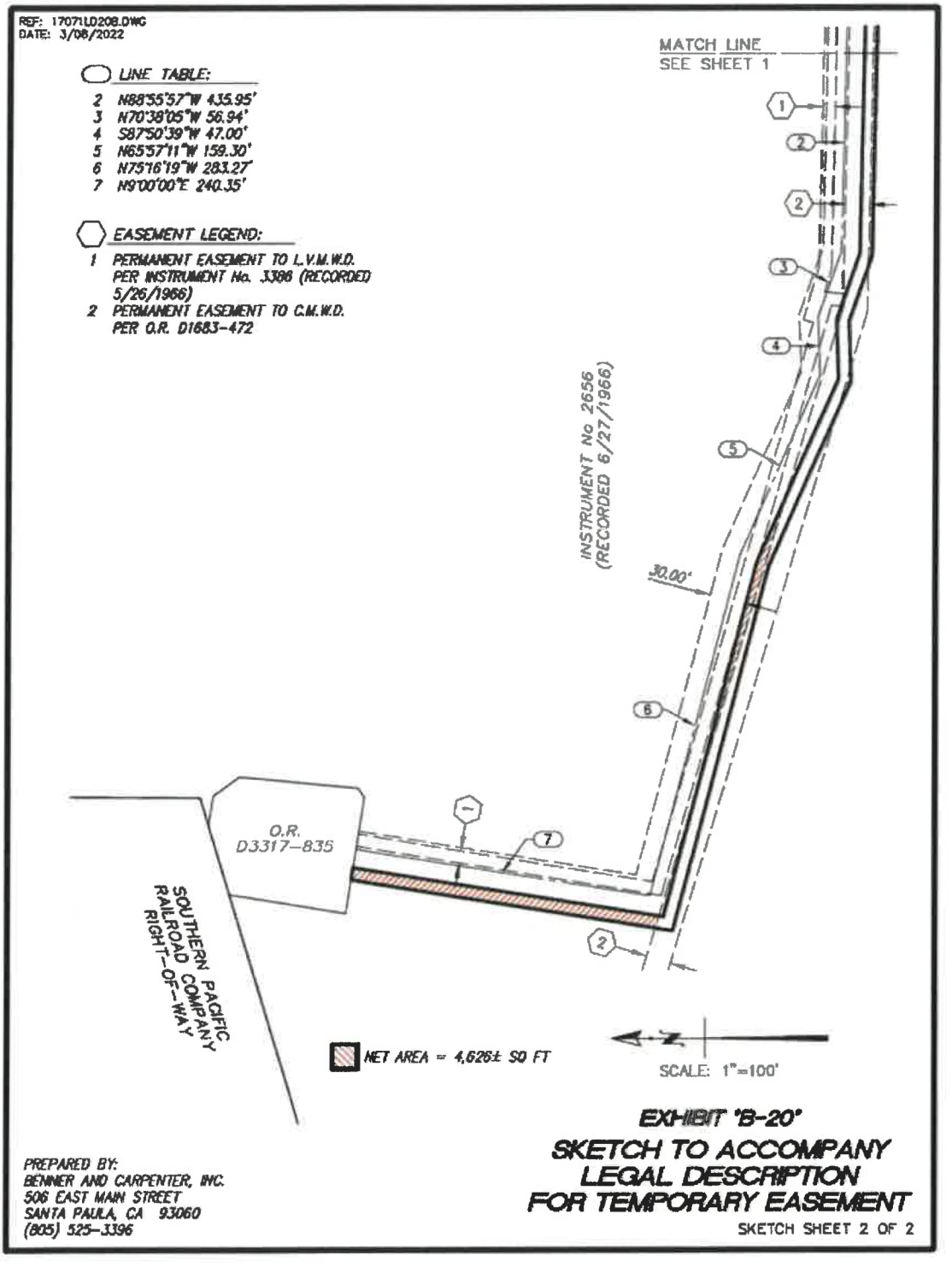
REF: 17071LD208.DWG
DATE: 3/08/2022
LINE TABLE:
2 N88°55'57"W 435.95'
3 N70°38'05"W 56.94'
4 S87°50'39"W 47.00'
5 N65°57'11"W 159.30'
6 N75°16'19"W 283.27'
7 N9°00'00"E 240.35'
EASEMENT LEGEND:
1 PERMANENT EASEMENT TO L.V.M.W.D. PER INSTRUMENT No. 3396 (RECORDED 5/26/1966)
2 PERMANENT EASEMENT TO C.M.W.D. PER O.R. D1683-472
MATCH LINE SEE SHEET 1
INSTRUMENT No 2656 (RECORDED 6/27/1966)
30.00'
O.R. D3317-835
SOUTHERN PACIFIC RAILROAD COMPANY RIGHT-OF-WAY
NET AREA = 4,626± SQ FT
SCALE: 1"=100'
EXHIBIT "B-20"
SKETCH TO ACCOMPANY LEGAL DESCRIPTION FOR TEMPORARY EASEMENT
SKETCH SHEET 2 OF 2
PREPARED BY:
BENNER AND CARPENTER, INC.
506 EAST MAIN STREET
SANTA PAULA, CA 93060
(805) 525-3396

HIGHEST AND BEST USE ANALYSIS

Highest and best use is typically defined as the reasonably probable use of property that maximizes the residual value of the land.

Four criteria characterize the highest and best use analysis. They are:

Legally Permissible Use
Those uses that are, or may be, legally permitted. This may exclude uses that are not, and unlikely to become, permitted by zoning, land-use planning, and uses forbidden by government regulations, and uses prohibited by deed restrictions or covenants.
Physically Possible Use
Those uses that are physically possible given the size, shape, topography, and other characteristics of the site.
Financially Feasible Use
Possible and permissible uses that will produce a positive net return to the owner of the property.
Maximally Productive Use
The use, among the feasible uses, that will produce the highest residual land value consistent with the rate of return warranted by the market for that use.

Properties sometimes do not contain the improvements that would yield the greatest return to the land. For this reason, the highest and best use of the land as if it were vacant is considered, as well as the highest and best use of the property as it is currently improved, if it is improved. In unusual cases, this analysis will call into question whether the existing improvements should be preserved. But typically, the analysis shows that if a property is already improved, the continuing use of the existing improvements yields more total return to the land, with consideration of risk, than does demolishing the improvements in favor of other uses.

HIGHEST AND BEST USE AS VACANT

When appraising a property, whether improved or vacant, we first determine the highest and best use of the land only. Then, if the property is improved, we determine its highest and best use as improved, but if the improvements are unaffected by the rights proposed, the highest and best use analysis is often limited to the property as if vacant.

LEGALLY PERMISSIBLE USES

The larger parcel contains assessor's parcels 2723-009-903 and 2723-010-904. Its zoning is OS-1XL, Open-Space with an Extra-Low Height District. The purpose of the zone is to provide regulations for publicly owned land in order to implement the city's adopted general plan, including the recreation, parks and open-space designations in the city's adopted district and community plans, and other relevant elements,

including the Open Space, Conservation and Public Recreation Elements. It appears to be legally conforming in that regard.

PHYSICALLY POSSIBLE USES

The larger parcel comprises 89.38± acres, or 3,893,393± square feet. Its shape is non-contiguous with adequate frontage along Shadow Oak Drive and Germain Street for a park use. All utilities are to the site. The topography varies. It contains an estimated 60% level ground with about 40% upslope areas of boulders and jagged rocky outcroppings. Off-site improvements are adequate. It is within a FEMA Zone D, A and X. It is well-suited physically for its legally permissible uses, which are essentially a park or open space.

FINANCIALLY FEASIBLE / MAXIMALLY PRODUCTIVE USES

The subject larger parcel is zoned for open-space use. This is a restricted land use that lacks many of economic characteristics of other established real-estate sectors. Financial feasibility and maximal productivity are less relevant to open-space. The rural residential market is the best surrogate for open-space land in the appraiser's opinion, since many ranchettes and large rural residential parcels contain open-space buffers. Some even contain parcels zoned as open space. The separate market for open-space land is too fragmented (conservation, mitigation banking, buy-and-hold investment, assemblages, etc.). There are some buyers who will purchase open-space land with the intention of attempting to overcome development impediments and construct extremely low-density residential. For that reason, we look at the housing market as a bellwether for open space.

On the demand side, potential homebuyers have receded from the market. Existing home sales slid 5.4% in June. Meanwhile, borrowing capacity has been curtailed by rising interest rates. The average mortgage rate has accelerated at the fastest pace in 35 years. A 15-year fixed rate mortgage is now about 4.8%, up from 2.2% a year ago. These factors have effectively destroyed demand. Home prices are officially falling, as well, reports the Los Angeles Times in late July 2022. Prices generally peak during summer, but the median sale price dropped by $10,000 from May to June. It might not seem that notable, but the last time the median price dropped from May to June was back in 2010. The region's six-county median sale price was $750,000, down from $760,000 in May. However, a broader view shows that prices are still soaring compared with last June, when the median price was $679,000.

HIGHEST AND BEST USE CONCLUSION, AS VACANT

Considering the preceding factors, it is concluded that the highest and best use of this site, as vacant, is for an open-space use, such as land that might be used in so-called land-banking, conservancy or for open-space mitigation use.

HIGHEST AND BEST USE OF THE REMAINDER

Its highest and best use as vacant will not be affected. As noted in the prior section, in terms of size, the remainder will be largely unaffected by the proposed acquisition.

VALUATION

There are three types of approaches to value. They are the sales comparison approach, cost approach and income capitalization approach. The sales comparison approach is the most frequently used approach in real estate appraisal practice for developing a value. Each provides an indicated value that is later reconciled into a final opinion of value for the subject property when more than one approach is used.

Sales Comparison Approach: A value indication is derived by comparing the property being appraised to similar properties that have sold recently; making qualitative or quantitative comparisons to the subject and then applying units of comparison to indicate a value for the larger parcel. The sales comparison approach may be used to value improved properties, vacant land, or land being considered as though vacant; it is the most common and preferred method of valuation when an adequate supply of comparable sales is available. Sales, listings and current escrows of comparables were considered, where appropriate, in this analysis.

Income Capitalization Approach: A value indication is derived for an income-producing property by converting its anticipated benefits (cash flows and reversion) into a value for real property interests. Typically, the annual net income is capitalized at a market-derived capitalization rate to provide an indication of value. The income approach is most often used for income producing properties or real estate acquired as an investment.

Cost Approach: A value indication is derived for a property by estimating the current cost to construct a replacement/reproduction of the existing structure(s); deducting depreciation from all sources; and adding the land value. The cost approach is most often used when valuing properties with new or relatively new improvements, special-use properties, or properties with very dated improvements.

The sales comparison approach is the only relevant valuation approach here, given the nature of the subject.

VALUE OF THE LARGER PARCEL (LAND ONLY)

As part of initial due diligence, the appraiser gleans information, then organizes and analyzes it. This includes market data needed for developing a value of the subject larger parcel. Public records are searched and market participants are interviewed. The appraiser has found data relating to the sales of properties deemed comparable to the subject larger parcel. The following sales were considered meaningful in providing an indication of value for the subject property. A map and summary of the comparable sales are presented as well.

COMPARABLE LAND SALES SUMMARY TABLE

Sale No.	Location APN	Seller Buyer	Sale Date Doc. No.	Sale Price	Zoning	Size (Acre) Size (SF)	Sale Price Per Square Foot
LS-1	26385 Josel Drive, Santa Clarita, California APN: 2848-005-031	Daniel M Jacob; Sara L Jacob Sergio Valencia; Maria Teresa Valencia	3/3/22 22-0246554	$335,000	NU4, Non-Urban 4	5.769± 251,319±	$1.33
LS-2	3948 Skelton Canyon Cir., Westlake Village, California APNs: 690-0-010-015 and 690-0-010-105	Magnum Property Investments, LLC Ferruzza, Patricia	9/14/21 20210914-00169993	$300,000	RPD1.5	15.880± 691,733±	$0.43
LS-3	12355 Zelzah Ave., Granada Hills, California APN: 2601-023-050	Athos Investments Llc La Bonita Ranch	9/7/21 21-1362597	$475,000	RE-40, Res. Estate	9.942± 433,093±	$1.10
LS-4	13000 Kagel Canyon Truck Trail, Kagel Canyon, California APNs: 2581-012-012 and 2581-014-001	Dixie Lewis; Stadler Family Trust Robert Irving Goldstein	3/11/20 20-0288829	$1,100,000	A-2-5, Heavy Ag	81.567± 3,553,080±	$0.31
Larger Parcel	Germain Street, Chatsworth, California APNs: 2723-009-903 and -010-904	*Appraisal*	—	—	OS-1XL, Open-Space with Extra-Low Height District	89.380± 3,893,393±	—

COMPARABLE LAND SALES MAP

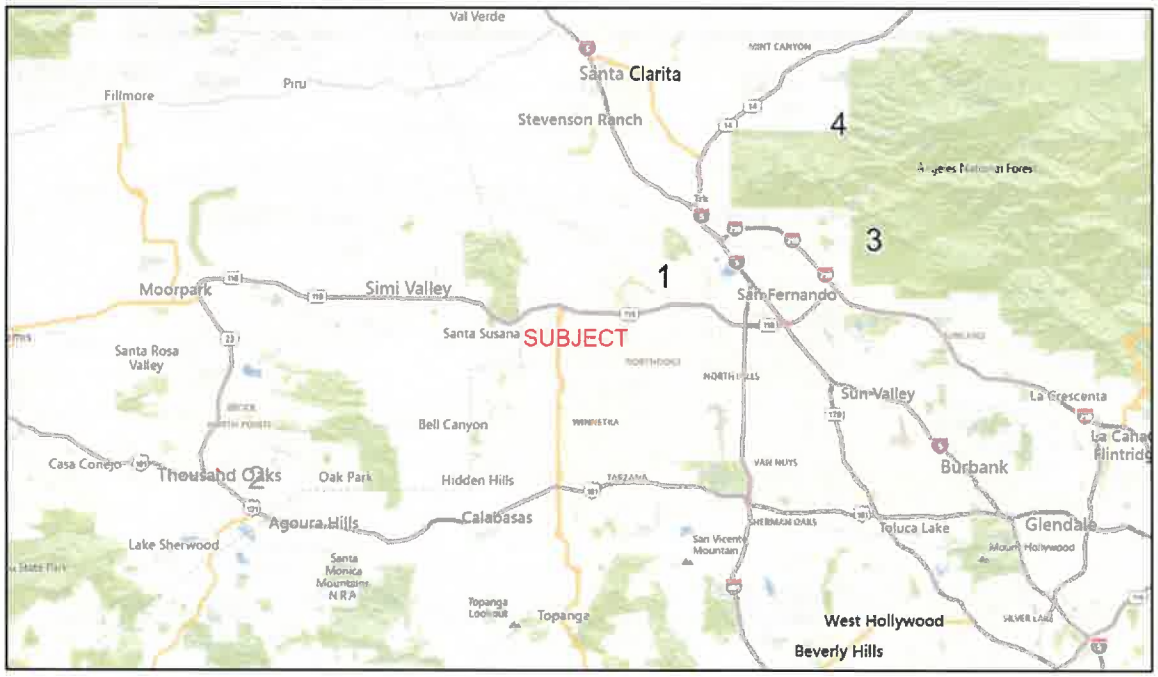

DISCUSSION OF SALE COMPARABLES

This analysis identifies the similarities and differences between subject and comparable properties. The primary elements of comparison include property rights, financing terms, conditions of sale (motivation), market conditions (sale date), and physical characteristics (e.g. zoning, utilities, site improvements, location, access, etc.).

The common quantitative adjustment process involves paired sales analysis that compares two or more market sales to derive an indication of the size of the adjustment for a single characteristic and applies it to the applicable data. Recognizing the weaknesses inherent in a quantitative analysis, a qualitative technique can be used. More specifically, a ranking or bracketing analysis is employed. The comparables are then analyzed to determine the relative position of the subject property within the comparable data array.

The unit of comparison for this type of land varies. For some of the comparables, buyers and sellers looked at lump-sum unit price. In other instances, market participants looked at price per acre and/or price per square foot. We have selected a unit of comparison as price per square foot for want of a clear direction. Also, for valuation of the proposed easements, price per square foot will be the unit used in calculations.

Based on conversations with market participants, the appraiser places an annual market-conditions adjustment of 3% on the comparables for time, which corresponds to nearly half of the rate of the current CPI inflation. Also, the appraiser examined household income within the comparables' census blocks to help determine location superiority or inferiority.



Comparable Land Sale 1

This 5.769-acre (251,319-square-foot) vacant land parcel is situated at 26385 Josel Drive in Santa Clarita, California. It is in Los Angeles County. The surrounding land uses are predominantly open-space and residential estate properties. Many large custom estate homes surround the property. It is located about 8 miles from Santa Clarita's civic center. The property is semi-rectangular and its contours are hilly. The approximate lot depth is 650 linear feet. The seller in the transaction was Daniel M. Jacob et ux. and the buyer was Sergio Valencia et ux. The date of recordation is March 3, 2022. This date is used as the sale date. The property sold for $335,000. This equates to $58,064 per gross acre or $1.33 per gross square foot. This comparable was confirmed through Jim Vose of Vose Properties, Inc., on August 30, 2022, by Jeremy Bagott, MAI, AI-GRS. Half to three-quarters of an acre of the property is buildable, reported Vose. The rest is open-space buffer that provides seclusion. It is located in the Iron Canyon area, which is a high fire-risk area. It is at the end of a paved street with water, gas, and electricity to the property.

A developer who builds custom homes purchased it, reported Vose. The transaction was facilitated via a loan from seller Jacob for $235,000. Vose doesn't believe the seller carry affected the sale price in what he reported as an arm's-length transaction.

It is superior to the subject in its Santa Clarita location, requiring a downward adjustment. It is also superior in size on a per-square-foot basis (economies of scale). This required an additional downward adjustment. The comparable is superior in its rectangular shape and superior in its NU4 zoning. Both required downward adjustments. It is inferior in market conditions, inferior in its off-sites and inferior in topography, requiring upward adjustments. All factors considered, the subject's unit value will be below this indicator.

Comparable Land Sale 2



This 15.880-acre (691,733-square-foot) vacant land parcel is situated at 3948 Skelton Canyon Circle in Westlake Village, California. It is in the Ventura County portion of Westlake Village (technically within the city of Thousand Oaks). The surrounding land uses are predominantly open-space and residential estate properties. It is located about half a mile from the Westlake Village civic center. The property is irregular and its contours are rolling. The seller in the transaction was Magnum Property Investments, LLC, and the buyer was Patricia Ferruzza. The date of recordation is September 14, 2021. This date is used as the sale date. The property sold for $300,000. This equates to $18,892 per gross acre or $0.43 per gross square foot. This comparable was confirmed through broker Jack Stephan on August 30, 2022, by Jeremy Bagott, MAI, AI-GRS. A set of expired plans that failed to gain city approval were reported to have been included in the sale. The property contains a creek. Oak trees on the site were described as a significant impediment to development. Another major issue is required wildfire-buffer setbacks. To create a fire buffer from the intended building envelope, an easement would be required from the neighboring property. The property is located at the end of a cul-de-sac within an HOA community.

The property was marketed as a woodlands preservation property of which the buyer would be a steward or derive a tax-deduction if the property were donated to a conservation group. Further, it was marketed as a property that could be maintained for family outings "while preserving it with an eye toward posterity." The seller was described as an investor. He had come up with plans to build a residence, but the plans failed to gain city approval due to protected oak trees and required setbacks. The owner of the investment firm died of Covid and partners sold it. The buyer was described by the broker as understanding the risk that the property might never be developed. The property was listed in February 2021 for $500,000 and reduced in April 2021 to $399,000, and reduced again in July 2021 to $300,000.

The property is superior in its Westlake Village location requiring a downward adjustment. This comparable is superior in size on a per-square foot basis (economies of scale), requiring an additional downward adjustment. It is superior in shape and topography. It is inferior in market conditions. It is equivalent to the subject in zoning. (Its firebreak setback impediment has been considered under the heading "zoning.") It is inferior in site condition, given the oak trees. All factors considered, the subject's unit value will be below this indicator.



Comparable Land Sale 3

This 9.942-acre (433,093-square-foot) vacant land parcel is situated at 12355 Zelzah Avenue in Granada Hills, California. The surrounding land uses are predominantly open space and single-family residential in nature. It is located in the suburb of Granada Hills, a community within the incorporated City of Los Angeles. The property is irregular and its contours are sloped. The seller in the transaction was Athos Investments, LLC, and the buyer was La Bonita Ranch. The date of recordation is September 7, 2021. This date is used as the sale date. The property sold for $475,000. This equates to $47,775 per gross acre or $1.10 per gross square foot. The comparable was confirmed through buyer Sandee Hernandez on August 30, 2022, by Jeremy Bagott, MAI, AI-GRS. Hernandez is a broker. Topographical maps, plans, and reports were said to have been included with the sale. A stream runs through the property, reports the buyer. There is a flat building envelope, but for maximum use of the lot, there will need to be grading to create terracing, said Hernandez. A dirt road leads to the site.

The property is reported as having "excellent city, mountain and valley views." It was marketed as a development parcel for a large estate property, horse ranch or for a lot split for three residential estate lots. Hernandez said she was in the process of purchasing an improved property next door. Instead, she decided to build her "dream home" on this property. She approached the seller of this property about the prospect of a seller carry. This made the difference, she said. She believes the seller carry resulted in a $25,000 higher sale price. This equates to about $2,515 per acre or $0.06 per square foot. The transaction was facilitated via a loan from Athos Investments, LLC, for $380,000.

It is superior in financing terms, given the seller carry, this required a downward adjustment. It is superior in location and superior in view, both requiring downward adjustments. It is superior in size on a per-square-foot basis, also requiring a downward adjustment. Finally, it is superior in zoning, requiring a downward adjustment. It is inferior in market conditions requiring an upward adjustment. It is also inferior in site condition and off-sites, both requiring upward adjustments. All factors considered, the subject's unit value will be below this indicator.

Comparable Land Sale 4



This 81.567-acre (3,553,080-square-foot) open space land parcel is situated at 13000 Kagel Canyon Truck Trail in Kagel Canyon, California. It is in Los Angeles County. The surrounding land uses are predominantly rural residential and open space in nature. It is located about 3.3 miles from the approximate geographic center of the district of Sylmar within the City of Los Angeles. The property is semi-rectangular and its contours are undulating. The seller in the transaction was Dixie Lewis and the Stadler Family Trust; the buyer was Robert Goldstein. The date of recordation is March 11, 2020. This date is used as the sale date. The property sold for $1,100,000. This equates to $13,486 per gross acre or $0.31 per gross square foot. This comparable was confirmed through buyer Robert Goldstein, on August 30, 2022, by Jeremy Bagott, MAI, AI-GRS. The property is reported to contain horse stables. It is bisected by Kagel Truck Trail and contains riverine wetlands. Offsites include a two-lane highway.

The seller carry helped expedite the sale but didn't result in a higher price, said the buyer, who, at the time of sale, said he was undecided about whether to simply hold it or develop it. He became somewhat close-mouthed after that question and ended the call. The transaction was facilitated via the aforementioned carry-back loan from the Stadler Family Trust for $825,000.

The property is superior in view, requiring a downward adjustment. It is also superior in shape, requiring a downward adjustment. Also, it is superior in zoning, requiring a downward adjustment. It is inferior in market conditions, requiring an upward adjustment. This comparable is inferior in location, and in site condition, off-sites and topography, all requiring upward adjustments. All factors considered, the subject's unit value will be above this indicator.

LAND VALUE CONCLUSION

Based on the previous discussion, the sale comparables indicate the subject bracketed value range is from $0.31 to $0.43 per square foot. See the array below:

Sale No.	Subject Value Less Than/ Greater Than	Sale Price Per Square Foot
LS-1	<	$1.33
LS-3	<	$1.10
LS-2	<	$0.43
Subject bracketed value range is from $0.31 to $0.43 per square foot		
LS-4	>	$0.31

It is no coincidence that Land Sale 1, the sale that achieved the highest price per square foot on an unadjusted basis, is the smallest in size, with Land Sale 3, the second-smallest in size achieving the second-highest price per square foot and so on. It demonstrates the significance of economies of scale. It indicates an expectation that Land Sales 1 through 3 would sell for a higher price per square foot. This was the most salient downward adjustment for Land Sale 1 through 3. Land Sale 2 is for all intents and purposes undevelopable. It was marketed as a land-banking opportunity or as a conservation property that could be donated to a conservancy to derive a tax offset. Land Sale 4 matches subject in size but is both inferior and superior to the subject in a number of ways. On balance, it is inferior. The subject clearly falls within the $0.31 to $0.43 range with shading toward the lower end of that spectrum based on its similarity in size to Land Sale 4. The appraiser's qualitative adjustment analysis is provided in the Addendum of this report.

VALUE OF THE LARGER PARCEL PER SQUARE FOOT (LAND ONLY)

= $ 0.35

VALUE OF THE LARGER PARCEL (LAND ONLY)

3,893,393 SF X $0.35/SF = $ 1,362,688

The per-square-foot value of the subject larger parcel valuation will be used for the partial acquisition calculations.

This unit value will be applied to the portion of the larger parcel within the proposed acquisition area.

VALUE OF THE PROPOSED ACQUISITIONS

The value of the proposed land and improvements, if any, is the contribution of the acquisition components as they relate to the value of the larger parcel.

The Las Virgenes Municipal Water District is seeking permanent easements in gross to install, construct, alter, operate, remove, replace, and maintain a water conduit, consisting of one or more underground water pipelines and related facilities. These related facilities may include markers, air valves, manholes, valves, meters, surge control devices, test stations, buried communication devices, buried electrical conduits and devices, pull boxes, and all related incidents, fixtures, and appurtenances. The latter may be located above ground or partially above ground. While the proposed easement will be "in, over, on, through, within, under, and across the easement area of the real property." To the appraiser's understanding, the rights proposed are principally underground rights with surface rights for initial installation and occasional maintenance of the underground infrastructure.

For assessor's parcel 2723-009-903, the proposed easement will be generally along Germain Street, along southern border of parcel, around trees, through ballpark outfield, through a parking lot and space east of the flood channel. The proposed permanent easements will be 20' wide. For assessor's parcel 2723-010-904, the proposed pipeline easement will be along an existing access road. It is a permanent 30' wide easement. The appraiser has been provided mapping with "net" areas, understood as areas with no previous encumbrances.

The appraiser treats the proposed permanent rights to be worth 40% of the fee simple value, that is, 40% of the full bundle of rights. The appraiser treats the previously encumbered area as already 40% depreciated off its fee simple value with 60% of fee simple value remaining before the new rights are acquired.

Land Acquisitions:

Easement Acquisition A-5			
14,219 SF X $0.35/SF X 40% (Unencumbered)	=	$	1,991
2,123 SF X $0.35/SF X 60% X 40% (Previously encumbered)	=	$	178
Easement Acquisition A-1			
1,981 SF X $0.35/SF X 40% (Unencumbered)	=	$	277
	=	$	
Easement Acquisition A-19			
16,314 SF X $0.35/SF X 40% (Unencumbered)	=	$	2,284
14,054 SF X $0.35/SF X 60% X 40% (Previously encumbered)	=	$	1,181
Total			**5,911**

Site Improvements: The appraiser discusses site improvements in the Construction Contract Work section below.

Total Value of the Proposed Acquisition: The total value of the proposed acquisition, which includes the land and any site improvements within the acquisition area, is presented below:

VALUE OF THE PROPOSED ACQUISITIONS (LAND AND SITE IMPROVEMENTS)

Land (Easement Acquisition)	$	5,911
Site Improvements	$	0
Total	**$**	**5,911**

VALUE OF THE REMAINDER AS PART OF LARGER PARCEL (LAND ONLY)

The value of the remainder as part of the larger parcel is its contributory value to the larger parcel, which is derived by deducting the value of the acquisition from the value of the larger parcel. The value of the remainder as part of the larger parcel is as follows:

Value of the Larger Parcel	$	1,362,688
Less: Value of Acquisition (Land Only)	$	5,911
Value of the Remainder as Part of the Larger Parcel	**$**	**1,356,777**

VALUE OF THE REMAINDER AFTER ACQUISITIONS, BEFORE BENEFITS

The appraisal process requires the valuation of the remainder property as a separate and distinct parcel considering all the market forces that indicate a diminution in value to the remainder property. The remainder property will not decrease in size and the shape, utility, and highest and best use will remain the same.

Note: The value of the remainder as part of the whole has been used for further remainder value calculations. There are no severance damages. If the value of the remainder is calculated separately, after acquisition, it may not sum to the exact value of the remainder as part of the larger parcel due to rounding. Therefore, the appraiser uses the former figure in further calculations.

The Value of the Remainder after Acquisition, before Considering Benefits is:

Land Only			
	=	$	1,356,777

Severance Damages: The value of the remainder property as part of the larger parcel is compared to the value of the remainder as a separate parcel after acquisition, before considering benefits, to estimate the loss in value to the remainder property as a measure of severance damages.

Value of Remainder as part of the Larger Parcel	$	1,356,777
Less: Value of Remainder After Acquisition, Before Considering Benefits	$	1,356,777
Loss in Market Value	$	0

VALUE OF REMAINDER AFTER ACQUISITIONS, CONSIDERING BENEFITS

The appraisal process requires the valuation of the remainder as a separate and distinct parcel considering all the market forces that indicate any increase in value to the remainder property. The proposed project is not expected to enhance the utility, desirability and marketability of the remainder parcel. For this reason, the benefit is not quantifiable, making the section below a moot point.

The Value of the Remainder after Acquisition, Considering Benefits is:

Land Only			
	=	$	1,356,777

Benefits: Under California eminent domain law, any potential benefits to the remainder can only be used to offset damages to the remainder. There are no damages. The proposed project therefore provides no quantifiable benefits to the remainder property in the after condition; therefore, no benefits inure to the remainder.

Gain in Market Value:		
Value of Remainder After Acquisition, Considering Benefits	$	1,356,777
Less: Value of Remainder After Acquisition, Before Benefits	$	1,356,777
Gain in Market Value	$	0

Cost to Cure: There are no costs to cure.

Construction Contract Work

Apart from items specifically compensated for in the Valuation section of this report, any damages to any site improvements will be repaired and restored in kind as part of construction contract work. The appraiser has been instructed that any trees on or near the proposed permanent easement area will be either protected in place or replaced with commercially available 24-inch box trees in what is being called "mitigation" as part of construction contract work, though the primary aim will be to protect the existing trees in place. Any removal of Coast Live Oaks will be replaced according to the Notice of Exemption provided in the addendum.

VALUE OF THE TEMPORARY CONSTRUCTION EASEMENTS (TCE)

In addition, the district seeks to acquire temporary construction easements. Temporary construction easements are sought for the purposes of facilitating construction of facilities, including the right to place equipment and vehicles in those proposed areas, pile earth thereon, and utilize the proposed easement areas for all other related activities and purposes in, on, over, under, through, and across that certain portion of the real property. They will be tantamount to exclusive temporary construction easements. The duration of the temporary rights sought is 12 months. At the end of this period, the temporary construction easement area will be given back to the property owner.

The valuation will be based on the estimated market rate of return to the land, applying that rate to the value of the required area per month for the period identified by the construction schedule. Historically, relatively low rates of return have been realized for long-term credit tenants featuring typical ground lease scenarios. From a buyer's perspective, the durability, length, and quality of the income stream are paramount factors.

Our research of current rates of return on land leases is summarized in the following table:

Summary of Reported Land Leasing Practices - Southern California

Item No.	Agency	Rate of Return Requirement[1]
1	City of Pasadena	4.00% - 6.00%
2	City of Riverside	4.00%
3	Los Angeles County Metropolitan Transportation Authority	5.00% - 7.00%
4	Port of Long Beach	10.00%
5	State of California Department of Transportation (Caltrans)	5.00% - 8.00%
6	U.S. Bureau of Land Management	5.27% +
7	Los Angeles Department of Water and Power	5.00%
8	County of Los Angeles	7.00%

[1] Quoted as a percentage of underlying land value. Source: Integra Realty Resources

One would expect land rent factors, especially for relatively shorter lease terms similar to the TCE construction easements, to be negotiated at higher rates, so an 8% annual rent factor has been selected for this analysis. As is typical with temporary construction easements, this one is not expected to cause disruption more than fraction of the total desired term being sought. However, disruption could be significant at times.

The appraiser treats the previously encumbered area as already 40% depreciated off its fee simple value with 60% of fee simple value remaining before the new rights are acquired.

Calculations are contained in the table on the following page:

Temporary Easement Acquisition A-6			
7,228 SF X $0.35/SF (Unencumbered)	=	$	2,530
3,145 SF X $0.35/SF X 60% (Previously encumbered)	=	$	660
Temporary Easement Acquisition A-6			
2,539 SF X $0.35/SF (Unencumbered)	=	$	889
Temporary Easement Acquisition A-20			
4,626 SF X $0.35/SF (Unencumbered)	=	$	1,619
5,912 SF X $0.35/SF X 60% (Previously encumbered)	=	$	1,242
Total	=	$	**6,940**
Annual Rate of Return	=		8%
Annual Return	=	$	555
Monthly Return	=	$	46.25
Total for 12 months	=	$	555

FAIR MARKET VALUE (AS OF AUGUST 18, 2022)

Market Value of Proposed Acquisitions		
Land	$	5,911
Improvements	$	0
Net Severance Damages		0
Temporary Construction Easements	$	555
Total	**$**	**6,466**
Rounded	**$**	**6,500**

This concludes the report.

APPRAISER CERTIFICATIONS

I certify that, to the best of my knowledge and belief:

- The statements of fact contained in this report are true and correct.
- The reported analyses, opinions, and conclusions are limited only by the reported assumptions and limiting conditions and are my personal, impartial, and unbiased professional analyses, opinions, and conclusions.
- I have no present or prospective interest in the property that is the subject of this report and no personal interest with respect to the parties involved.
- I have performed no services, as an appraiser or in any other capacity, regarding the property that is the subject of this report within the three-year period immediately preceding acceptance of this assignment.
- I have no bias with respect to the property that is the subject of this report or to the parties involved with this assignment.
- My engagement in this assignment was not contingent upon developing or reporting predetermined results.
- My compensation for completing this assignment is not contingent upon the development or reporting of a predetermined value or direction in value that favors the cause of the client, the amount of the value opinion, the attainment of a stipulated result, or the occurrence of a subsequent event directly related to the intended use of this appraisal.
- My analyses, opinions, and conclusions were developed, and this report has been prepared, in conformity with the Uniform Standards of Professional Appraisal Practice.
- I have made a personal inspection of the property that is the subject of this report.
- No one provided significant real property appraisal assistance to the person signing this certification.
- The reported analyses, opinions, and conclusions were developed, and this report has been prepared, in conformity with the Code of Professional Ethics and Standards of Professional Practice of the Appraisal Institute.

- The use of this report is subject to the requirements of the Appraisal Institute relating to review by its duly authorized representatives.

- As of the date of this report, I have completed the continuing education program for Designated Members of the Appraisal Institute.

Jeremy Bagott, MAI, AI-GRS
California Certified General Appraiser
License No. AG031250

ADDENDUM

Chicago Title Company

725 South Figueroa Street, Suite 200, Los Angeles, CA 90017
Phone: (213) 488-4300 • Fax: (213) 488-4377

Issuing Policies of Chicago Title Insurance Company

ORDER NO.: **00090133-994-LT2-DB**

Escrow/Customer Phone: **(213) 488-4300**

Hamner, Jewell & Associates
530 Paulding Circle, Suite A
Arroyo Grande, CA 93420
ATTN: Heather Johnson
Email: hjohnson@hamner-jewell.com
Ref:

Title Officer: Dave Balassi (LA/Comm)
Title Officer Phone: (213) 488-4394
Title Officer Fax: (213) 488-4360
Title Officer Email: DL-CTI-LosAngeles-UnitX49@ctt.com

PROPERTY: **APN: 2723-009-903, LOS ANGELES, CA**

PRELIMINARY REPORT

*In response to the application for a policy of title insurance referenced herein, **Chicago Title Company** hereby reports that it is prepared to issue, or cause to be issued, as of the date hereof, a policy or policies of title insurance describing the land and the estate or interest therein hereinafter set forth, insuring against loss which may be sustained by reason of any defect, lien or encumbrance not shown or referred to as an exception herein or not excluded from coverage pursuant to the printed Schedules, Conditions and Stipulations or Conditions of said policy forms.*

The printed Exceptions and Exclusions from the coverage and Limitations on Covered Risks of said policy or policies are set forth in Attachment One. The policy to be issued may contain an arbitration clause. When the Amount of Insurance is less than that set forth in the arbitration clause, all arbitrable matters shall be arbitrated at the option of either the Company or the Insured as the exclusive remedy of the parties. Limitations on Covered Risks applicable to the CLTA and ALTA Homeowner's Policies of Title Insurance which establish a Deductible Amount and a Maximum Dollar Limit of Liability for certain coverages are also set forth in Attachment One. Copies of the policy forms should be read. They are available from the office which issued this report.

This report (and any supplements or amendments hereto) is issued solely for the purpose of facilitating the issuance of a policy of title insurance and no liability is assumed hereby. If it is desired that liability be assumed prior to the issuance of a policy of title insurance, a Binder or Commitment should be requested.

The policy(s) of title insurance to be issued hereunder will be policy(s) of Chicago Title Insurance Company, a Florida corporation.

Please read the exceptions shown or referred to herein and the exceptions and exclusions set forth in Attachment One of this report carefully. The exceptions and exclusions are meant to provide you with notice of matters which are not covered under the terms of the title insurance policy and should be carefully considered.

It is important to note that this preliminary report is not a written representation as to the condition of title and may not list all liens, defects and encumbrances affecting title to the land.

Chicago Title Company

By: _____
Authorized Signature

By
Randy Dunn, President

Attest
Michael Gravelle, Secretary

Chicago Title Company

725 South Figueroa Street, Suite 200, Los Angeles, CA 90017
Phone: (213) 488-4300 • Fax: (213) 488-4377

PRELIMINARY REPORT

EFFECTIVE DATE: **May 30, 2018 at 7:30 a.m.**

ORDER NO.: 00090133-994-LT2-DB

The form of policy or policies of title insurance contemplated by this report is:

1. THE ESTATE OR INTEREST IN THE LAND HEREINAFTER DESCRIBED OR REFERRED TO COVERED BY THIS REPORT IS:

   Fee Estate

2. TITLE TO SAID ESTATE OR INTEREST AT THE DATE HEREOF IS VESTED IN:

   The City of Los Angeles, a municipal corporation

3. THE LAND REFERRED TO IN THIS REPORT IS DESCRIBED AS FOLLOWS:

   See Exhibit A attached hereto and made a part hereof.

EXHIBIT "A"

LEGAL DESCRIPTION

THE LAND REFERRED TO HEREIN BELOW IS SITUATED IN THE CITY OF LOS ANGELES, IN THE COUNTY OF LOS ANGELES, STATE OF CALIFORNIA, AND IS DESCRIBED AS FOLLOWS:

THE NORTH 15 ACRES OF THE NORTHWEST QUARTER OF THE NORTHEAST QUARTER OF SECTION 13, TOWNSHIP 2 NORTH, RANGE 17 WEST, SAN BERNARDINO MERIDIAN, IN THE CITY OF LOS ANGELES, COUNTY OF LOS ANGELES, STATE OF CALIFORNIA, ACCORDING TO THE OFFICIAL PLAT OF SAID LAND FILED IN THE DISTRICT LAND OFFICE OCTOBER 5, 1896.

EXCEPTING THEREFROM ANY PORTION INCLUDED WITHIN THE LINES OF COUNTY ROADS EXISTING ON OR BEFORE MAY 17, 1949.

ALSO EXCEPT THEREFROM THAT PORTION OF SAID LAND AS DESCRIBED IN THE JUDGMENT AND FINAL ORDER OF CONDEMNATION NO. 930 645, IN FAVOR OF THE LOS ANGELES COUNTY FLOOD CONTROL DISTRICT, RECORDED OCTOBER 5, 1972 AS INSTRUMENT NO. 2981, OF OFFICIAL RECORDS.

APN: **2723-009-903**

EXCEPTIONS

AT THE DATE HEREOF, ITEMS TO BE CONSIDERED AND EXCEPTIONS TO COVERAGE IN ADDITION TO THE PRINTED EXCEPTIONS AND EXCLUSIONS IN SAID POLICY FORM WOULD BE AS FOLLOWS:

A. Property taxes, which are a lien not yet due and payable, including any assessments collected with taxes to be levied for the fiscal year 2018-2019.

B. There were no taxes levied for the fiscal year 2017-2018 as the property was vested in a public entity.

Tax Identification No.: 2723-009-903

C. The lien of supplemental or escaped assessments of property taxes, if any, made pursuant to the provisions of Chapter 3.5 (commencing with Section 75) or Part 2, Chapter 3, Articles 3 and 4, respectively, of the Revenue and Taxation Code of the State of California as a result of the transfer of title to the vestee named in Schedule A or as a result of changes in ownership or new construction occurring prior to Date of Policy.

1. Water rights, claims or title to water, whether or not disclosed by the public records.

2. An easement for conduits over a strip of land 10 feet wide through the north side of the northwest quarter of the northeast quarter, 15 feet south of the north line thereof, as conveyed to the City of Los Angeles, by deed recorded in Book 6376 Page 210 of Deeds and in Book 6416 Page 190, of Deeds.

3. Easement(s) for the purpose(s) shown below and rights incidental thereto as condemned by an instrument,

Entitled:	Final Order of Condemnation
Court:	Superior Court
Case No.:	812668
In favor of:	Calleguas Municipal Water District, a public corporation
Purpose:	permanent right of way easement for water conduit and aqueduct purposes
Recording Date:	August 7, 1964
Recording No:	5670 in Book D-2582 Page 733, of Official Records
Affects:	Portions of the Land, the exact location of which can be determined by examination of the above-mentioned instrument, which contains a complete legal description of the affected portions of said Land.

4. Easement(s) for the purpose(s) shown below and rights incidental thereto as reserved in a document;

Reserved by:	The City of Los Angeles
Purpose:	roadway, ingress and egress
Recording Date:	October 5, 1972
Recording No:	2981, of Official Records
Affects:	The westerly and northwesterly 15 feet of Parcel No. 135A, described therein.

5. Easement(s) for the purpose(s) shown below and rights incidental thereto, as granted in a document:

Granted to:	The Metropolitan Water District of Southern California, a public corporation
Purpose:	a permanent easement to construct, reconstruct, maintain, operate, enlarge, remove, and replace a line of lines of pipe at any time from time to time, for water transportation
Recording Date:	June 27, 1977
Recording No:	77-679016, of Official Records
Affects:	Portions of the Land, the exact location of which can be determined by examination of the above-mentioned instrument, which contains a complete legal description of the affected portions of said Land.

EXCEPTIONS
(Continued)

6. Discrepancies, conflicts in boundary lines, shortage in area, encroachments, or any other matters shown on

   Map: Record of Survey
   Recording Date: February 6, 1984
   Recording No: in Book 93 Pages 32 to 37, inclusive, of Record of Survey

7. Please be advised that our search did not disclose any open Deeds of Trust of record. If you should have knowledge of any outstanding obligation, please contact the Title Department immediately for further review prior to closing.

8. Any easements not disclosed by those public records which impart constructive notice as to matters affecting title to real property and which are not visible and apparent from an inspection of the surface of said land.

9. Discrepancies, conflicts in boundary lines, shortage in area, encroachments or any other facts which a correct survey would disclose, and which are not shown by the public records.

10. Matters which may be disclosed by an inspection and/or by a correct ALTA/NSPS Land Title Survey of said Land that is satisfactory to the Company, and/or by inquiry of the parties in possession thereof.

11. Any rights of the parties in possession of a portion of, or all of, said Land, which rights are not disclosed by the public records.

    The Company will require, for review, a full and complete copy of any unrecorded agreement, contract, license and/or lease, together with all supplements, assignments and amendments thereto, before issuing any policy of title insurance without excepting this item from coverage.

    The Company reserves the right to except additional items and/or make additional requirements after reviewing said documents.

PLEASE REFER TO THE "INFORMATIONAL NOTES" AND "REQUIREMENTS" SECTIONS WHICH FOLLOW FOR INFORMATION NECESSARY TO COMPLETE THIS TRANSACTION.

END OF EXCEPTIONS

Chicago Title Company

725 South Figueroa Street, Suite 200, Los Angeles, CA 90017
Phone: (213) 488-4300 • Fax: (213) 488-4377

Issuing Policies of Chicago Title Insurance Company

ORDER NO.: **00090125-994-LT2-DB**

Hamner, Jewell & Associates
530 Paulding Circle, Suite A
Arroyo Grande, CA 93420
ATTN: Heather Johnson
Email: hjohnson@hammer-jewell.com
Ref:

Escrow/Customer Phone: **(213) 488-4300**

Title Officer: **Dave Balassi (LA/Comm)**
Title Officer Phone: **(213) 488-4394**
Title Officer Fax: **(213) 488-4360**
Title Officer Email: **DL-CTI-LosAngeles-UnitX49@ctt.com**

PROPERTY: **APN 2723-010-904, LOS ANGELES, CA**

PRELIMINARY REPORT

*In response to the application for a policy of title insurance referenced herein, **Chicago Title Company** hereby reports that it is prepared to issue, or cause to be issued, as of the date hereof, a policy or policies of title insurance describing the land and the estate or interest therein hereinafter set forth, insuring against loss which may be sustained by reason of any defect, lien or encumbrance not shown or referred to as an exception herein or not excluded from coverage pursuant to the printed Schedules, Conditions and Stipulations or Conditions of said policy forms.*

The printed Exceptions and Exclusions from the coverage and Limitations on Covered Risks of said policy or policies are set forth in Attachment One. The policy to be issued may contain an arbitration clause. When the Amount of Insurance is less than that set forth in the arbitration clause, all arbitrable matters shall be arbitrated at the option of either the Company or the Insured as the exclusive remedy of the parties. Limitations on Covered Risks applicable to the CLTA and ALTA Homeowner's Policies of Title Insurance which establish a Deductible Amount and a Maximum Dollar Limit of Liability for certain coverages are also set forth in Attachment One. Copies of the policy forms should be read. They are available from the office which issued this report.

This report (and any supplements or amendments hereto) is issued solely for the purpose of facilitating the issuance of a policy of title insurance and no liability is assumed hereby. If it is desired that liability be assumed prior to the issuance of a policy of title insurance, a Binder or Commitment should be requested.

The policy(s) of title insurance to be issued hereunder will be policy(s) of Chicago Title Insurance Company, a Florida corporation.

Please read the exceptions shown or referred to herein and the exceptions and exclusions set forth in Attachment One of this report carefully. The exceptions and exclusions are meant to provide you with notice of matters which are not covered under the terms of the title insurance policy and should be carefully considered.

It is important to note that this preliminary report is not a written representation as to the condition of title and may not list all liens, defects and encumbrances affecting title to the land.

Chicago Title Company

By: _____
Authorized Signature

By: _____
Randy Quirk, President

Attest: _____
Michael Gravelle, Secretary

Chicago Title Company

725 South Figueroa Street, Suite 200, Los Angeles, CA 90017
Phone: (213) 488-4300 • Fax: (213) 488-4377

PRELIMINARY REPORT

EFFECTIVE DATE: **May 4, 2018 at 7:30 a.m.**

ORDER NO.: 00090125-994-LT2-DB

The form of policy or policies of title insurance contemplated by this report is:

1. THE ESTATE OR INTEREST IN THE LAND HEREINAFTER DESCRIBED OR REFERRED TO COVERED BY THIS REPORT IS:

   Fee Estate

2. TITLE TO SAID ESTATE OR INTEREST AT THE DATE HEREOF IS VESTED IN:

   The City of Los Angeles, a municipal corporation

3. THE LAND REFERRED TO IN THIS REPORT IS DESCRIBED AS FOLLOWS:

   See Exhibit A attached hereto and made a part hereof.

EXHIBIT "A"

LEGAL DESCRIPTION

THE LAND REFERRED TO HEREIN BELOW IS SITUATED IN THE CITY OF LOS ANGELES, IN THE COUNTY OF LOS ANGELES, STATE OF CALIFORNIA, AND IS DESCRIBED AS FOLLOWS:

THE NORTHWEST QUARTER OF SECTION 13, TOWNSHIP 2 NORTH, RANGE 17 WEST, SAN BERNARDINO BASE AND MERIDIAN, IN THE CITY OF LOS ANGELES, COUNTY OF LOS ANGELES, STATE OF CALIFORNIA.

EXCEPTING THEREFROM THAT PORTION OF SAID NORTHWEST QUARTER OF SAID SECTION 13 LYING NORTHERLY OF THE SOUTHERLY RIGHT OF WAY LINE OF THE LAND CONVEYED TO THE SOUTHERN PACIFIC RAILROAD COMPANY AS DESCRIBED IN DEEDS RECORDED IN BOOK 1364, PAGE 247, IN BOOK 1368, PAGE 235, IN BOOK 1371, PAGE 94, IN BOOK 1373, PAGE 106 AND IN BOOK 6519, PAGE 165 ALL OF DEEDS, IN THE OFFICE OF THE COUNTY RECORDER OF LOS ANGELES COUNTY.

ALSO EXCEPTING THEREFROM THAT PORTION OF SAID NORTHWEST QUARTER OF SAID SECTION 13, INCLUDED WITHIN A PARCEL OF LAND CONVEYED TO THE SOUTHERN PACIFIC RAILROAD COMPANY AS DESCRIBED IN DEED RECORDED IN BOOK 1464, PAGE 319 OF DEEDS, IN THE OFFICE OF THE COUNTY RECORDER.

ALSO, EXCEPTING THEREFROM THAT PORTION OF SAID NORTHWEST QUARTER OF SAID SECTION 13, INCLUDED WITHIN A PARCEL OF LAND BOUNDED AND DESCRIBED AS FOLLOWS:

COMMENCING AT THE NORTHWEST CORNER OF SAID SECTION 13; THENCE SOUTHERLY ALONG THE WESTERLY LINE OF SAID SECTION, SOUTH 0°13'01"WEST 639.06 FEET TO A POINT, SAID POINT TO BE THE TRUE POINT OF BEGINNING; FOR PURPOSES OF THIS DESCRIPTION; THENCE SOUTH 79°46'00" EAST, 69.22 FEET; THENCE NORTH 83°56'14"EAST, 37.87 FEET; THENCE SOUTH 24°53'56" EAST, 20.00 FEET; THENCE SOUTH 65°06'04" WEST, 53.53 FEET; THENCE SOUTH 10°14'00" WEST, 110.59 FEET; THENCE NORTH 79°46'00" WEST TO THE WESTERLY LINE OF SAID SECTION; THENCE NORTHERLY ALONG SAID WESTERLY LINE TO THE TRUE POINT OF BEGINNING.

ALSO, EXCEPTING THEREFROM THAT PORTION OF SAID NORTHWEST QUARTER OF SAID SECTION 13 LYING SOUTHERLY AND SOUTHWESTERLY OF A LINE DESCRIBED AS FOLLOWS:

BEGINNING AT THE INTERSECTION OF THE EASTERLY LINE OF SAID NORTHWEST QUARTER OF SAID SECTION WITH THE WESTERLY PROLONGATION OF THE CENTER LINE OF DEVONSHIRE STREET, 100 FEET WIDE AS SAID CENTER LINE IS SHOWN IN THE CITY ENGINEER'S F.B. 12919, PAGE 8; THENCE WEST ALONG SAID WESTERLY PROLONGATION, 180 FEET; THENCE NORTH 28°13'00" WEST, 1040 FEET; THENCE WEST, 320 FEET; THENCE SOUTH 50°49'00" WEST, 540 FEET; THENCE NORTH 39°11'00" WEST TO THE WESTERLY LINE OF SAID SECTION 13.

ALSO, EXCEPTING THEREFROM THAT PORTION OF SAID NORTHWEST QUARTER OF SAID SECTION 13, INCLUDED WITHIN A PARCEL OF LAND BOUNDED AND DESCRIBED AS FOLLOWS:

BEGINNING AT A POINT IN THE EASTERLY LINE OF SAID NORTHWEST QUARTER OF SAID SECTION, SAID POINT BEING DISTANT NORTH 0°10'20" EAST 1117.21 FEET MEASURED ALONG THE EASTERLY LINE OF SAID NORTHWEST QUARTER FROM THE INTERSECTION OF SAID EASTERLY LINE WITH THE WESTERLY PROLONGATION OF SAID CENTER LINE OF DEVONSHIRE STREET; THENCE NORTH 86°20'36" WEST 251.96 FEET; THENCE SOUTH 13°19'24" WEST, 218.39 FEET; THENCE SOUTH 76°35'52" EAST TO THE EASTERLY LINE OF SAID NORTHWEST QUARTER; THENCE ALONG SAID EASTERLY LINE, NORTH 0°10'20" EAST TO THE POINT OF BEGINNING.

ALSO, EXCEPTING THEREFROM THAT PORTION OF SAID NORTHWEST QUARTER OF SAID SECTION 13 LYING NORTHERLY AND EASTERLY OF A LINE DESCRIBED AS FOLLOWS:

EXHIBIT A
(Continued)

BEGINNING AT A POINT IN THE EASTERLY LINE OF SAID NORTHWEST QUARTER DISTANT NORTH 0°10'20" EAST, 1117.21 FEET MEASURED ALONG THE EASTERLY LINE OF SAID NORTHWEST QUARTER FROM THE INTERSECTION OF SAID EASTERLY LINE WITH THE WESTERLY PROLONGATION OF SAID CENTER LINE OF DEVONSHIRE STREET; THENCE NORTH 86°20'38" WEST, 103.87 FEET; THENCE NORTH 71°24'40" WEST, 572.63 FEET; THENCE NORTH 0°01'40" WEST TO THE NORTHERLY LINE OF SAID NORTHWEST QUARTER.

ALSO EXCEPTING THEREFROM ANY PORTION OF SAID NORTHWEST QUARTER OF SAID SECTION 13, WHICH MAY BE INCLUDED WITHIN A STRIP OF LAND, 50 FEET WIDE RUNNING NORTHERLY AND SOUTHERLY THROUGH SAID NORTHWEST QUARTER UPON WHICH WAS LOCATED APRIL 22, 1912, A SPUR RAILROAD TRACK OF THE SOUTHERN PACIFIC RAILROAD COMPANY AS MENTIONED IN DEED FROM IDA S. GRAY RECORDED IN BOOK 4886, PAGE 307 OF DEEDS, IN THE OFFICE OF SAID COUNTY RECORDER.

ALSO EXCEPTING THEREFROM THAT PORTION OF THE NORTHWEST QUARTER OF SECTION 13, TOWNSHIP 2 NORTH, RANGE 17 WEST, SAN BERNARDINO BASE AND MERIDIAN, IN THE COUNTY OF LOS ANGELES, STATE OF CALIFORNIA, DESCRIBED AS FOLLOWS:

BEGINNING AT THE NORTH QUARTER CORNER OF SAID SECTION 13; THENCE SOUTH 00°10'20" WEST 32.85 FEET ALONG THE NORTH-SOUTH QUARTER SECTION LINE OF SAID SECTION 13, TO A LOS ANGELES COUNTY SURVEYOR'S MONUMENT SET AS, AND MARKED, WITNESS CORNER, PER LOS ANGELES COUNTY SURVEYOR'S MAP NO. B-1015-1; THENCE SOUTH 89° 35'03" WEST 13.20 FEET; THENCE NORTH 88°52'05" WEST 900.32 FEET; THENCE SOUTH 73°00'55" WEST 163.63 FEET; THENCE SOUTH 10°38'25" WEST 181.35 FEET; THENCE SOUTH 53°06'25" WEST 311.88 FEET; THENCE NORTH 09°05'10" EAST, 5.67 FEET TO THE TRUE POINT OF BEGINNING; THENCE
1. NORTH 80°54'40" WEST 60.00 FEET; THENCE

2. NORTH 09°05'10" EAST, 95.30 FEET TO A POINT OF THE SOUTHERLY LINE OF THE SOUTHERN PACIFIC RAILROAD RIGHT OF WAY; THENCE,

3. NORTH 73°00'55" EAST 58.46 FEET ALONG THE SOUTHERLY LINE OF SAID SOUTHERN PACIFIC RAILROAD RIGHT OF WAY; THENCE,

4. SOUTH 80°54'40" EAST 24.10 FEET; THENCE

5. SOUTH 35°54'40" EAST 26.00 FEET; THENCE

6. SOUTH 05°18'20" WEST 96.46 FEET; THENCE

7. SOUTH 54°05'20" WEST 9.00 FEET; THENCE

8. NORTH 80°54'40" WEST 35.00 FEET TO THE TRUE POINT OF BEGINNING.

ALSO EXCEPT ONE HALF OF ALL OF THE OIL, GAS AND OTHER MINERALS, IN AND UNDER SAID LAND, WITH THE RIGHT OF INGRESS AND EGRESS TO AND FROM SAID LAND, FOR THE PURPOSE OF DRILLING, EXPLORING AND MINING FOR SUCH MINERALS, AND REMOVING THE SAME, AS RESERVED BY MINNIE A. PALMER AND LAURA A. HILL, IN DEED RECORDED JANUARY 16, 1956 IN BOOK 50049, PAGE 394 OF OFFICIAL RECORDS.

APN: 2723-010-904

EXCEPTIONS

AT THE DATE HEREOF, ITEMS TO BE CONSIDERED AND EXCEPTIONS TO COVERAGE IN ADDITION TO THE PRINTED EXCEPTIONS AND EXCLUSIONS IN SAID POLICY FORM WOULD BE AS FOLLOWS:

A. Property taxes, which are a lien not yet due and payable, including any assessments collected with taxes to be levied for the fiscal year 2018-2019.

B. There were no taxes levied for the fiscal year 2017-2018 as the property was vested in a public entity.

Tax Identification No.: 2723-010-904

C. The lien of supplemental or escaped assessments of property taxes, if any, made pursuant to the provisions of Chapter 3.5 (commencing with Section 75) or Part 2, Chapter 3, Articles 3 and 4, respectively, of the Revenue and Taxation Code of the State of California as a result of the transfer of title to the vestee named in Schedule A or as a result of changes in ownership or new construction occurring prior to Date of Policy.

1. Water rights, claims or title to water, whether or not disclosed by the public records.

2. Easement(s) for the purpose(s) shown below and rights incidental thereto, as granted in a document:

Granted to:	Pacific Telephone and Telegraph Company
Purpose:	poles and wires
Recording Date:	December 1, 1950
Recording No:	2807, of Official Records
Affects:	Portions of the Land, the exact location of which can be determined by examination of the above-mentioned instrument, which contains a complete legal description of the affected portions of said Land.

An assignment

Recording Date:	September 1, 1978
Recording No:	78-977004, of Official Records

3. Easement(s) for the purpose(s) shown below and rights incidental thereto as set forth in a document:

Purpose:	road
Recording Date:	January 16, 1956
Recording No:	1644, of Official Records
Affects:	Portions of the Land, the exact location of which can be determined by examination of the above-mentioned instrument, which contains a complete legal description of the affected portions of said Land.

4. Easement(s) for the purpose(s) shown below and rights incidental thereto, as granted in a document:

Granted to:	Shell Oil Company, Incorporated
Purpose:	pipelines
Recording Date:	June 12, 1956
Recording No:	3935, of Official Records
Affects:	Portions of the Land, the exact location of which can be determined by examination of the above-mentioned instrument, which contains a complete legal description of the affected portions of said Land.

EXCEPTIONS
(Continued)

5. Easement(s) for the purpose(s) shown below and rights incidental thereto, as granted in a document:

Granted to:	Southern California Edison Company
Purpose:	poles and wires
Recording Date:	August 9, 1952
Recording No:	4020, of Official Records
Affects:	Portions of the Land, the exact location of which can be determined by examination of the above-mentioned instrument, which contains a complete legal description of the affected portions of said Land.

6. Easement(s) for the purpose(s) shown below and rights incidental thereto, as granted in a document:

Granted to:	Southern California Edison Company
Purpose:	poles and wires
Recording Date:	November 1, 1956
Recording No:	3708, of Official Records
Affects:	The exact location and extent of said easement is not disclosed of record.

7. Easement(s) for the purpose(s) shown below and rights incidental thereto, as granted in a document:

Granted to:	Shell Oil Company, Incorporated
Purpose:	pipelines
Recording Date:	February 8, 1957
Recording No:	3762, of Official Records
Affects:	Portions of the Land, the exact location of which can be determined by examination of the above-mentioned instrument, which contains a complete legal description of the affected portions of said Land.

8. Easement(s) for the purpose(s) shown below and rights incidental thereto, as granted in a document:

Granted to:	Southern California Edison Company
Purpose:	electric transmission line
Recording Date:	July 9, 1957
Recording No:	489, of Official Records
Affects:	Portions of the Land, the exact location of which can be determined by examination of the above-mentioned instrument, which contains a complete legal description of the affected portions of said Land.

9. Easement(s) for the purpose(s) shown below and rights incidental thereto, as granted in a document:

Granted to:	Southern California Edison Company
Purpose:	poles and wires
Recording Date:	December 31, 1957
Recording No:	3380, of Official Records
Affects:	Portions of the Land, the exact location of which can be determined by examination of the above-mentioned instrument, which contains a complete legal description of the affected portions of said Land.

EXCEPTIONS
(Continued)

10. Easement(s) for the purpose(s) shown below and rights incidental thereto, as granted in a document:

Granted to:	Shell Oil Company, a corporation
Purpose:	pipelines
Recording Date:	March 10, 1958
Recording No:	3640, of Official Records
Affects:	Portions of the Land, the exact location of which can be determined by examination of the above-mentioned instrument, which contains a complete legal description of the affected portions of said Land.

11. Easement(s) for the purpose(s) shown below and rights incidental thereto, as granted in a document:

Granted to:	Southern California Edison Company
Purpose:	poles and wires
Recording Date:	March 24, 1960
Recording No:	3229, of Official Records
Affects:	Portions of the Land, the exact location of which can be determined by examination of the above-mentioned instrument, which contains a complete legal description of the affected portions of said Land.

12. Easement(s) for the purpose(s) shown below and rights incidental thereto, as granted in a document:

Granted to:	Calleguas Municipal Water District, a municipal corporation
Purpose:	pipelines
Recording Date:	July 13, 1962
Recording No:	847 in Book D1683 Page 472, of Official Records
Affects:	Portions of the Land, the exact location of which can be determined by examination of the above-mentioned instrument, which contains a complete legal description of the affected portions of said Land.

Matters contained in that certain document

Entitled:	Grant Deed
Dated:	September 23, 1974
Executed by:	Calleguas Municipal Water District and Las Virgenes Municipal Water District, as tenants in common and The Metropolitan Water District of Southern California, a public corporation
Recording Date:	February 28, 1975
Recording No:	42, of Official Records

Reference is hereby made to said document for full particulars.

13. Easement(s) for the purpose(s) shown below and rights incidental thereto, as granted in a document:

Granted to:	The Pacific Telephone and Telegraph Company
Purpose:	underground telephone, telegraph and communication structures
Recording Date:	April 22, 1963
Recording No:	5080, of Official Records
Affects:	Portions of the Land, the exact location of which can be determined by examination of the above-mentioned instrument, which contains a complete legal description of the affected portions of said Land.

EXCEPTIONS
(Continued)

14. Easement(s) for the purpose(s) shown below and rights incidental thereto, as granted in a document:

Granted to:	Southern California Edison Company
Purpose:	aerial and underground electrical lines and communication lines
Recording Date:	July 14, 1965
Recording No:	4360, of Official Records
Affects:	Portions of the Land, the exact location of which can be determined by examination of the above-mentioned instrument, which contains a complete legal description of the affected portions of said Land.

15. Easement(s) for the purpose(s) shown below and rights incidental thereto as reserved in a document;

Reserved by:	Dourence Corporation, a corporation
Purpose:	water line
Recording Date:	June 27, 1966
Recording No:	2656, of Official Records
Affects:	The exact location and extent of said easement is not disclosed of record.

16. Easement(s) for the purpose(s) shown below and rights incidental thereto as set forth in a document:

Purpose:	public street or highway
Recording Date:	June 27, 1966
Recording No:	2656, of Official Records
Affects:	The exact location and extent of said easement is not disclosed of record.

17. Covenants, conditions and restrictions but omitting any covenants or restrictions, if any, including, but not limited to those based upon race, color, religion, sex, sexual orientation, familial status, marital status, disability, handicap, national origin, citizenship, immigration status, primary language, ancestry, source of income, gender, gender identity, gender expression, medical condition or genetic information, as set forth in applicable state or federal laws, except to the extent that said covenant or restriction is permitted by applicable laws, as set forth in the document referred to in the numbered item last above shown.

18. Easement(s) for the purpose(s) shown below and rights incidental thereto, as granted in a document:

Granted to:	Las Virgenes Municipal Water District
Purpose:	pipelines
Recording Date:	May 26, 1966
Recording No:	3386, of Official Records
Affects:	Portions of the Land, the exact location of which can be determined by examination of the above-mentioned instrument, which contains a complete legal description of the affected portions of said Land.

19. Easement(s) for the purpose(s) shown below and rights incidental thereto, as granted in a document:

Granted to:	The Metropolitan Water District of Southern California, a public corporation
Purpose:	pipelines, ingress and egress
Recording Date:	June 27, 1977
Recording No:	77-679017, of Official Records
Affects:	Portions of the Land, the exact location of which can be determined by examination of the above-mentioned instrument, which contains a complete legal description of the affected portions of said Land.

EXCEPTIONS
(Continued)

20. Easement(s) for the purpose(s) shown below and rights incidental thereto, as granted in a document:

Granted to:	Las Virgenes Municipal Water District, a municipal corporation
Purpose:	pipelines
Recording Date:	October 1, 1982
Recording No:	82-994261, of Official Records
Affects:	Portions of the Land, the exact location of which can be determined by examination of the above-mentioned instrument, which contains a complete legal description of the affected portions of said Land.

Matters contained in that certain document

Entitled:	Assignment of Easement
Dated:	October 11, 1982
Executed by:	Las Virgenes Municipal Water District, a municipal corporation and The Metropolitan Water District of Southern California, a public corporation
Recording Date:	November 22, 1982
Recording No:	82-1168157, of Official Records

Reference is hereby made to said document for full particulars.

21. Discrepancies, conflicts in boundary lines, shortage in area, encroachments, or any other matters shown on

Map:	Record of Survey
Recording No:	in Book 93 Pages 32 to 37, inclusive of Record of Surveys

22. Matters contained in that certain document

Entitled:	Memorandum of Unrecorded Grant Project Agreement
Dated:	May 11, 2016
Executed by:	Los Angeles County Regional Park and Open Space District and City of Los Angeles
Recording Date:	May 10, 2017
Recording No:	2017-0520402, of Official Records

Reference is hereby made to said document for full particulars.

23. Please be advised that our search did not disclose any open Deeds of Trust of record. If you should have knowledge of any outstanding obligation, please contact the Title Department immediately for further review prior to closing.

24. Any easements not disclosed by the public records as to matters affecting title to real property, whether or not said easements are visible and apparent.

25. Discrepancies, conflicts in boundary lines, shortage in area, encroachments or any other facts which a correct survey would disclose, and which are not shown by the public records.

26. Matters which may be disclosed by an inspection and/or by a correct ALTA/NSPS Land Title Survey of said Land that is satisfactory to the Company, and/or by inquiry of the parties in possession thereof.

EXCEPTIONS
(Continued)

27. Any rights of the parties in possession of a portion of, or all of, said Land, which rights are not disclosed by the public records.

The Company will require, for review, a full and complete copy of any unrecorded agreement, contract, license and/or lease, together with all supplements, assignments and amendments thereto, before issuing any policy of title insurance without excepting this item from coverage.

The Company reserves the right to except additional items and/or make additional requirements after reviewing said documents.

PLEASE REFER TO THE "INFORMATIONAL NOTES" AND "REQUIREMENTS" SECTIONS WHICH FOLLOW FOR INFORMATION NECESSARY TO COMPLETE THIS TRANSACTION.

END OF EXCEPTIONS

Recording requested by:
Hamner, Jewell & Associates
Government Real Estate Services

When recorded, mail to:
Las Virgenes Municipal Water District
4232 Las Virgenes Road
Calabasas, CA 91302

Exempt from the $75 Building and Jobs Act Fee per Gov't Code § 27388.1(2)(D) Public Agency
No fee pursuant to Government Code § 6103
No Documentary Transfer Tax per R&T Code § 11922
No Recording Fee per Government Code § 27383

EASEMENT DEED
(Waterline)

APN: _____

For a valuable consideration, receipt of which is hereby acknowledged,

_____ (hereinafter referred to as "Grantor"),

hereby grants to the

LAS VIRGENES MUNICIPAL WATER DISTRICT, a municipal corporation of the State of California, (hereinafter referred to as "Grantee"),

A **Permanent Easement** in gross to survey, install, construct, reconstruct, enlarge, lay, alter, operate, patrol, remove, relocate, and to replace, and maintain a water conduit, consisting of one or more underground water pipelines and related facilities. These related facilities may include but are not limited to markers, air valves, manholes, valves, meters, surge control devices, test stations, buried communication devices, buried electrical conduits and devices, pull boxes, and all related incidents, fixtures, and appurtenances. The markers, test stations, pull boxes, blow off valves, air release valves, manholes, other related facilities, and turnouts may be located above ground or partially above ground. This easement shall be in, over, on, through, within, under, and across the Easement Area of the Real Property as defined in this paragraph. The "Real Property" is in the County of Los Angeles, State of California, and is described in Exhibit "A", attached hereto and incorporated by reference herein. The "Easement Area" which comprises the Permanent Easement is described in Exhibit "B" and depicted in Exhibit "C", attached hereto and incorporated by reference herein.

The Permanent Easement described herein shall be SUBJECT TO THE FOLLOWING TERMS AND CONDITIONS:

1. The facilities and improvements installed in the Easement Area collectively are referred to herein as the "Waterline Facilities." Plans for the Waterline Facilities as they exist from time to time shall be maintained at the Grantee's principal offices.

2. Grantee shall have the right of ingress and egress for personnel, vehicles, and construction equipment to, from, and along the Easement Area at any time, without prior notice, including the right to use lanes, drives, rights-of-way, and roadways within the Real Property which now exist or which hereinafter may be constructed, as shall be convenient and necessary for the purpose of exercising the rights herein set forth; provided, however, that nothing herein shall prevent or limit Grantor's rights to close such roadways, lanes, or rights-of-way, and to provide Grantee with comparable alternative access to the Easement Area, as deemed reasonable by the Grantee.

3. Grantor shall not temporarily or permanently modify, or allow others to in any way modify, the ground surface elevation in the Easement Area from the elevation established upon completion of construction of the Waterline Facilities without the Grantee's written consent, which consent shall not be withheld unreasonably. Grantor shall not conduct, or permit others to conduct, grading operations, ripping, stockpiling, or use, or permit others to use, explosives within or proximate to the Easement Area to the extent that the Waterline Facilities may be damaged.

4. This easement is subject to all existing fencing, canals, irrigation ditches, laterals, pipelines, roads, electrical transmission facilities, and communication lines existing on the date this easement is granted, and all future uses which do not directly or indirectly interfere with or endanger Grantee's exercise of the rights described herein; provided, however, that Grantee shall have the right to clear and keep clear from the Easement Area all explosives, buildings, structures, walls, and other facilities of a permanent nature, and any earth cover or stockpile of material placed without the Grantee's written consent, or which interfere with Grantee's access to and operation and protection of the Waterline Facilities; and

A **Temporary Construction Easement** for the purposes of facilitating construction of Grantee Facilities, including the right to place equipment and vehicles, pile earth thereon, and utilize said Temporary Construction Easement for all other related activities and purposes in, on, over, under, through, and across that certain portion of the Real Property which is described and depicted in Exhibit __ page(s) __, attached hereto and incorporated by reference herein ("Temporary Construction Easement"). Said Temporary Construction Easement shall commence ___ (#) days after issuance by Grantee of a Notice of Commencement of Construction, which shall be issued to Grantor by U.S. Mail, and shall automatically terminate upon completion of construction of Grantee Facilities and restoration of the Temporary Construction Easement area, or one (1) year after the effective date of the Notice of Commencement of Construction, whichever occurs first; however, Grantee shall have the right to extend the Temporary Construction Easement term in additional three (3) month increments if Grantee determines that additional time beyond the one year period is necessary for construction completion. In such case, Grantee shall have the unilateral right to extend the Temporary Construction Easement period through construction completion and agrees to compensate Grantor _____**Dollars ($___)** for each three-month extension term exercised. Payment for any such extension(s) shall be paid by Grantee to Grantor concurrent with Grantees' written notice to Grantor of Grantees' intent to

exercise such extension provisions. In any event, this Temporary Construction Easement shall terminate on or before **[Date]**.

Executed this _____ day of _____, 20__

GRANTOR:
(Grantor's name and vesting information)

By: _____
Name:
Title: (delete if not applicable)

ACKNOWLEDGMENT

A notary public or other officer completing this certificate verifies only the identity of the individual who signed the document to which this certificate is attached, and not the truthfulness, accuracy, or validity of that document.

State of California
County of _____

On _____ before me, _____, Notary Public, personally appeared _____, who proved to me on the basis of satisfactory evidence to be the person(s) whose name(s) is/are subscribed to the within instrument and acknowledged to me that he/she/they executed the same in his/her/their authorized capacity(ies), and that by his/her/their signatures(s) on the instrument the person(s), or the entity upon behalf of which the person(s) acted, executed the instrument.

I certify under PENALTY OF PERJURY under the laws of the State of California that the foregoing paragraph is true and correct.

WITNESS my hand and official seal.

Signature _____ (Seal)

CERTIFICATE OF ACCEPTANCE

This is to certify that the interest in real property conveyed by the deed dated _____ from ***[INSERT OWNER NAME HERE]*** to Las Virgenes Municipal Water District, a governmental agency, is hereby accepted by the undersigned officer on behalf of the Board of Directors pursuant to authority conferred by resolution of the Board of Directors adopted on August 27, 1996 and the grantee consents to the recordation thereof by its duly authorized officer.

Dated: _____ By: _____

David W. Pedersen, P.E.
General Manager
Las Virgenes Municipal Water District

2020 082114

FILED
May 14 2020

CITY OF LOS ANGELES
OFFICE OF THE CITY CLERK
ROOM 395, CITY HALL
LOS ANGELES, CALIFORNIA 90012
CALIFORNIA ENVIRONMENTAL QUALITY ACT

CITY CLERK'S USE

NOTICE OF EXEMPTION

(Articles II and III – City CEQA Guidelines)

Submission of this form is optional. The form shall be filed with the County Clerk, 12400 E. Imperial Highway, Norwalk, California, 90650, pursuant to Public Resources Code Section 21152(b). Pursuant to Public Resources Code Section 21167(d), the filing of this notice starts a 35-day statute of limitations on court challenges to the approval of the project.

LEAD CITY AGENCY AND ADDRESS:	City of Los Angeles Bureau of Street Services Urban Forestry Division 1149 S. Broadway, Suite 400 Los Angeles, CA 90015	COUNCIL DISTRICT 12
PROJECT TITLE: 22300 W. Chatsworth Street		LOG REFERENCE 1-1444002131

PROJECT LOCATION: 22300 W. Chatsworth Street

DESCRIPTION OF NATURE, PURPOSE, AND BENEFICIARIES OF PROJECT: This is a joint project with jurisdictional land with State of California, Recreation and Parks, City of Los Angeles. There are twenty three protected trees under ordinance 177404 LAMC, within the scope of the project. All are located on Recreation and Park property. The project involves the installation of a new 16-inch diameter transmission pipeline that will serve as a backup water source in the event of interruption of water service on another LVMWD pipeline. Coast Live Oaks (Quercus agrifolia) # 352 & # 355 will require removal in order to place boring equipment and for drilling. Relocation of bore equipment is not an option as any relocated would require addition protected and non-protected trees to be removed. The Oaks would also not survive the boring under them. All other protected trees shall be protected in place and protective fencing has been installed. Replant within the project shall be (8) 24 inch box size Coast Live Oaks (Quercus agrifolia) trees. The trees shall be Bonded for a period of 3 years to insure their survivability.

NAME OF PERSON OR AGENCY CARRYING OUT PROJECT, IF OTHER THAN LEAD AGENCY:
Ted Lubeshkoff

CONTACT PERSON	TELEPHONE NUMBER
Ted Lubeshkoff	626 358-5690

EXEMPT STATUS: (Check One)

	CITY CEQA GUIDELINES	STATE CEQA GUIDELINES
☐ MINISTERIAL	Art. II, Sec. 2.b	Sec. 15268
☐ DECLARED EMERGENCY	Art. II, Sec. 2.a(1)	Sec. 15269(a)
☐ EMERGENCY PROJECT	Art. II, Sec. 2.a(2)(3)	Sec. 15269(b)(c)
☐ GENERAL EXEMPTION	Art. II, Sec. 1	Sec. 15061(b)(3)
☒ CATEGORICAL EXEMPTION*	Art. III, Sec. 1 Class 1 Cat. 2	Sec. 15300.2
☐ STATUTORY*	Art. ____, Sec. ____ Class ____ Cat ____	Sec. _____

* See Public Resources Code Sec. 21080 and set forth state and city guidelines provisions.

THIS NOTICE WAS POSTED
ON May 14 2020
UNTIL June 15 2020
REGISTRAR – RECORDER/COUNTY CLERK

JUSTIFICATION FOR PROJECT EXEMPTION:

Operation, repair, maintenance or minor alteration of existing facilities of both investor and publicly owned utilities, electrical power, natural gas, sewage, water and telephone, and mechanical systems serving existing facilities including alterations to accommodate a specific use. From the City of Los Angeles Environmental Quality Act Guidelines (2002).

IF FILED BY APPLICANT, ATTACH CERTIFIED DOCUMENT OF EXEMPTION FINDING

SIGNATURE: T. Tull	TITLE: Superintendent	DATE: 2/19/20

FEE: $	RECEIPT NO.	RECD BY	DATE

Comparable No.	Larger Parcel	Land Sale 1		Land Sale 2		Land Sale 3		Land Sale 4	
Property Address	Germain Street	26385 Josel Drive		3948 Skelton Canyon Cir		12355 Zelzah Ave.		15000 Kagel Canyon Truck Trail	
City, ZIP	Chatsworth, 91311	Santa Clarita, 91387		Westlake Village, 91362		Granada Hills, 91344		Kagel Canyon, 91342	
APN(s)	2723-089-903 and -010-904	2848-005-031		690-0-010-015 and 690-0-010-105		2601-023-050		2581-012-012 and 2581-014-001	
Distance From Subject	N/A	14.5 Mi. to NE		13.5 Mi. to NE		6 Mi. to NE		14.3 Mi. to E	
Confirmation	N/A	Jim Vose, Vose Properties, Inc (661) 435-6536, on August 30, 2022		Jack Stephan, (310) 936-8334, on August 30, 2022		Buyer Sandee Hernandez, (818) 744-9275, on August 30, 2022,		Robert Goldstein 818-883-7043, on August 30, 2022.	
Zoning	OS-1XL, Open-Space with Extra-Low Height District	NU4, Non-Urban 4		RPD1.5		RE-40, Res. Estate		A-2-5, Heavy Ag	
Entitlements		None		None		None		None known	
Gross Land Area (Ac.)	89.38	5.769		15.880		9.942		81.567	
Gross Land Area (SF)	3,893,393	251,319		691,733		433,093		3,553,080	
Sale Date	N/A	March 3, 2022		September 14, 2021		September 7, 2021		March 11, 2020	
Time on Market (Mos.)	N/A	30		20		3		30	
Document/Record No.	N/A	22-0246554		20210914-00169993		21-1362597		20-0288829	
Grantor/Seller	N/A	Daniel M Jacob; Sara L Jacob		Magnum Property Investments, LLC		Athos Investments Llc		Dine Lewis; Stadler Family Trust	
Grantee/Buyer	N/A	Sergio Valencia; Maria Teresa Valencia		Ferruzza, Patricia		La Bonita Ranch		Robert Irving Goldstein	
Sale Price	N/A	$335,000		$300,000		$475,000		$1,100,000	
Financing	N/A	Seller		All-Cash		Seller		Seller	
Sale Price	N/A	$335,000		$300,000		$475,000		$1,100,000	
Sale Price Per Square Foot	N/A	$1.33		$.43		$1.10		$.31	
Property Rights	N/A	Fee Simple		Fee Simple		Fee Sample		Fee Simple	
Financing Terms	N/A	Seller		All-Cash		Seller	Sup. (-)	Seller	
Conditions of Sale	N/A	Typical		Typical		Typical		Typical	
Expenditures After Sale	N/A	None		None known		None		None	
Annual Appreciation	3%								
Market Conditions	Date of Value: 8/18/22	3/3/22	Inf. (-)	9/14/21	Inf. (-)	9/7/21	Inf. (-)	3/11/20	Inf. (-)
Location	Chatsworth	Santa Clarita	Sup. (-)	Westlake Village (T.O.	Sup. (-)	Granada Hills	Sup. (-)	Kagel Canyon	Inf. (-)
View	None	None		Woodlands	0.0%	Pan. valley, mtns	Sup. (-)	Pan. city, hillsides	Sup (-)
Size (SF)	3,893,393	251,319	Sup. (-)	691,733	Sup. (-)	433,093	Sup. (-)	3,553,080	
Shape/Topography	Noncontiguous / Varies	Rectangular / Hilly	Sup. (-)	Irregular / Rolling	Sup. (-)	Irregular / Sloped		Semi-Rectangular / Undulating	Sup (-)
Zoning/ Entitlements	OS-1XL, Open-Space with Extra-Low Height District / None	NU4, Non-Urban 4 / None	Sup. (-)	RPD1.5 / None		RE-40, Res. Estate / None	Sup. (-)	A-2-5, Heavy Ag / None known	Sup (-)
Site Condition / Off-sites	Above-Avg. / Good	Above-Avg. Avg.	Inf. (-)	Fair / Good	Inf. (-)	Avg. Below-Avg.	Inf. (-)	Avg. Avg.	Inf. (-)
Cumulative Adj. Net Total			Sup. (-)		Sup. (-)		Sup. (-)		Inf. (-)

About Appraiser Jeremy Bagott, MAI, AI-GRS

Jeremy Bagott has appraised properties for public agencies for the purposes of eminent domain, CFD bond issuance, successor-agency disposition, and lending. A former editor at the Los Angeles Daily News, he holds a bachelor's degree from California State University, Northridge, in foreign language and is a former Marine. He has written extensively on land-use issues and has been published in the Wall Street Journal, Voices of the Governing Institute, the National Review, the Los Angeles Daily News, the Orange County Register, the Los Angeles Business Journal, the San Diego Business Journal, the Riverside Press-Enterprise and the Ventura County Star. He provides commercial appraisal services for many property types and has experience in appraising improved owner-user and income-producing properties, as well as speculative land, land slated for immediate development, agricultural land and residential estate properties. In the area of eminent domain, he has appraised properties for full fee, partial fee, permanent easement and temporary easement acquisitions.

REPRESENTATIVE VALUATIONS INCLUDE

Industrial – DCOR-Rincon Onshore Separation Facility, Mussel Shoals; Tejon Industrial Complex, Kern County; Carlsbad Oaks North Business Park, Carlsbad; Centerpointe Business Park, Moreno Valley; high-cube logistics buildings, Chino.

Office – Assorted multitenant professional and medical office properties in Oxnard, Ventura, Los Angeles and South Orange County.

Retail – Shopping centers, free-standing retail buildings and properties on pads in Kern, Los Angeles, Riverside, San Bernardino and Ventura counties.

Multifamily Residential – Apartment complexes and small-investor properties across Southern California and the Central Coast.

Residential – Valuation properties for the cities of Carson, Lynwood and Palmdale as part of neighborhood stabilization programs; valuation of properties acquired for fire station expansion, Fullerton; valuation of estate properties in Santa Barbara County.

Agricultural – Orchards, row-crop and grazing land in Ventura, Santa Barbara, San Luis Obispo, Kern, Kings, Fresno, Madera, Riverside, Tulare and Tuolumne counties.

Special-Use Properties – Elementary School, Bassett Unified School District, Baldwin Park; City Hall, Maywood; Community Center, Boyle Heights (Los Angeles); Elementary School Site, Oxnard School District, Oxnard; Charter School, Los Angeles Unified School District.

Right-of-way Projects – Riverside, Los Angeles, Kern, Tulare, Kings, Madera, Tuolumne, Ventura, Santa Barbara and San Luis Obispo counties; Riverside Transmission Reliability Project 69kV Transmission Line Project, Riverside; Downs, Inyokern, Searles and McGen Substation Expansion Project, SCE, Kern County; State Route 91 Corridor Improvement Project, Corona.

LICENSES, DESIGNATIONS, PROFESSIONAL ASSOCIATIONS AND MEMBERSHIPS

Certified General Real Estate Appraiser, State of California (CA AG031250)
Appraisal Institute (MAI, #496093), Current Member of the Southern California Chapter
Member, Committee on Assessments, Special Taxes and Other Financing Facilities
Member, IRWA, Chapter 47

BOOKS

"The Compact Real Estate Appraiser," ISBN 978-0999710715, Publication Date: December 15, 2017
"Guaconomics: Dipping a Chip into America's Besieged Party Bowl," ISBN 978-0999710722, Publication Date: July 6, 2018

FIRM QUALIFICATIONS

HAMNER, JEWELL & ASSOCIATES is a specialized real estate consulting firm that provides right of way and governmental real estate acquisition, appraisal, and relocation services. For over 40 years, Hamner, Jewell and Associates has provided these services to public agencies throughout California. With offices in Ventura, San Luis Obispo County, and Fresno, we are able to service public agencies especially effectively throughout the Central Coast and Central Valley regions and have managed right of way acquisition projects spanning from the City of Poway in San Diego county, through the Los Angeles Basin, Santa Clarita, and up to the Sacramento Delta and the Silicon Valley.

Clients. Our extensive client list includes municipalities, counties, school districts, special districts, redevelopment agencies, water and sanitary districts, flood control districts, nonprofit housing organizations, private developers, public utilities, and engineering firms, and has included the California High Speed Rail Authority.

Services. Our primary specialization is acquiring real property rights, including easements and other partial interests, and providing mandated relocation assistance to property occupants on behalf of entities with the authority to acquire property by eminent domain. Our services are designed with the specific intent of successfully acquiring property by agreement, minimizing the instances in which eminent domain action would otherwise be required, but preserving the acquiring agency's right to initiate such action should it become a viable necessity.

We have acquired temporary and permanent easements or fee interests for roadways, sewer lines, waterlines, well sites, tank sites, utilities, greenbelts, and construction areas. We have also acquired access rights, air rights, slope easements, drainage easements, and properties for redevelopment projects and capital improvement projects such as parks, public parking lots, and sewer expansion projects. We have relocated residences and businesses that have ranged from office, retail, and industrial, including restaurants and bars, to automotive businesses, and even a tattoo parlor.

Additionally, our services include appraisals and project planning budgetary analysis, acquisition and relocation planning, including drafting acquisition and relocation guidelines, relocation plans, and replacement housing plans. We also provide preliminary relocation surveys and cost estimates, market surveys, resource analysis, title analysis, representation in lease negotiations, interim property management, utility relocation coordination, construction noticing, dispute resolution, and other general real property consulting services.

Federal Funding: Uniform Act Compliance. We are experienced and knowledgeable with all federal funding requirements of the Uniform Relocation Assistance and Real Property Acquisition Policies Act ("Uniform Act") and we have an excellent working relationship with our local federal oversight representatives from Caltrans and HUD. To facilitate federally funded public works projects, we work extensively with Caltrans District representatives to facilitate projects in compliance with Caltrans and federal funding requirements. In addition to FHWA/Caltrans-funded projects, we have also handled property acquisition funded by other federal agencies, such as acquiring transportation center sites utilizing Federal Transit Administration (FTA) funding, and avigation easements utilizing Federal Aviation Administration (FAA) funding.

Professional Accolades **HAMNER, JEWELL & ASSOCIATES** has been repeatedly recognized as "Employer of the Year" by California Central Coast Chapter 47 of the International Right of Way Association in recognition of outstanding professionalism, support, and active involvement in the right of way acquisition field, and Managing Senior Associate Lillian Jewell has twice been named Chapter 47's Professional of the Year. Additionally, HJA Associates David Jewell and Cathy Springford have also been honored with Professional of the Year acknowledgements, David in 2003 and Cathy in 2010.

JTL Consultants
Consulting Arborists and Botanists
952 Buena Vista Street • Duarte, CA 91010
(626) 358-5690 • info@JTLconsultants.com

Protected Tree Report

Las Virgenes Municipal Water District
Twin Lakes Pump Station Pipeline Project
Chatsworth, California

Prepared For:
Kennedy Jenks Consultants
2775 North Ventura Road, Suite 100
Oxnard, CA 93036
(805) 973-5700

Prepared By:
Ted Lubeshkoff, ASCA Registered Consulting Arborist #513
Jeannine Lubeshkoff, ASCA Registered Consulting Arborist #500

July 31, 2019

TABLE OF CONTENTS

Summary 1

Introduction 1

Background 1

Assignment 2

Limits of Assignment 2

Purpose and Use of the Report 2

Observations 2

Site Description 2

Tree Descriptions 3

Discussion 7

Tunneling under the Root System 7

Change in Grade 7

Mechanical Damage 8

Trenching 8

Soil Compaction 8

Pruning 8

Mitigation for Pruning and Removal of Protected Trees 9

Conclusion 9

Recommendations 10

Glossary 11

Bibliography 12

Appendix A – Site Maps 13

Appendix B – Photos 18

Appendix C – Assumptions and Limiting Conditions 33

Appendix D – Certificate of Performance 34

Summary

Kennedy Jenks Consultants requested a **Protected Tree Report**[1] from JTL Consultants for a Las Virgenes Municipal Water District (LVMWD) project in the City of Los Angeles within Santa Susana Pass State Historic Park, Chatsworth Park South, and Chatsworth Park North. This Project involves the installation of a new 16-inch diameter transmission pipeline that will serve as a back-up water source in the event of interruption of water service on another LVMWD pipeline. All trees within the project area in Chatsworth Park South and Chatsworth Park North are protected by the City of Los Angeles Department of Recreation and Parks. All native sycamores and oaks on the project are considered **Protected Trees**, as defined in the City of Los Angeles Tree Preservation Ordinance No. 177404.

JTL Consultants surveyed the area and found 23 Protected Trees outside of Chatsworth Park North and 33 trees within Chatsworth Park North that could be impacted by the proposed construction. Based upon the pipeline alignment location provided by Kennedy Jenks, two coast live oaks (*Quercus agrifolia*) in Chatsworth Park North will be removed with mitigation planting and two California sycamores (*Platanus racemosa*) will be removed without mitigation planting. Branches on two coast live oaks in Chatsworth Park North will need to be removed for construction clearance and will be mitigated with the planting of two coast live oaks with a DBH equal to or greater than the DBH of the branches removed. The DBH of the branches will be measured at the time of the branch removals.

Tree protection recommendations include pruning trees for alignment clearance, installing protective fencing, tunneling beneath the root zone of one coast live oak, and having the project arborist monitor the site when tree protection fencing is installed and when trenching occurs within the **dripline** of the trees.

Introduction

Background

The LVMWD is planning a project for the Twin Lakes Pump Station Pipeline Project, which involves the installation of a new 16-inch diameter transmission pipeline that will serve as a back-up water source in the event of interruption of water service on another LVMWD pipeline. The pipeline will begin at Andora Avenue in Chatsworth, traversing north within Valley Circle Boulevard and turning west along the southern portion of the City of Los Angeles' Chatsworth Park North. As the new pipeline enters the City's Park, it crosses under a channel owned by Los Angeles County Flood Control District, through Chatsworth Park North, crossing portions of Santa Susana Pass State Historic Park and the City of Los Angeles' Chatsworth Park South, and terminating at the Twin Lakes pump station (Appendix A – Site Maps).

Kennedy Jenks Consultants is providing the engineering design services for the project. Ted Lubeshkoff, from JTL Consultants, met Becca Alonge and Bill Yates, from Kennedy Jenks Consultants, at the project site on May 21, 2019 to discuss the scope of the project and its impact

[1] Terms appearing in boldface type are defined in the Glossary

on the City of Los Angeles' Protected Trees. Ted Lubeshkoff also met with Art Flores, from the City of Los Angeles Departemnt of Recreation and Parks on June 4, 2019 and July 15, 2019 to discuss which trees in Chatsworth Park North will be impacted by the project. On July 16, 2019. JTL Consultants inventoried and mapped the trees that could be impacted by the project.

Assignment

The contract with Kennedy Jenks Consultants, dated June 17, 2019, states JTL Consultants will locate, measure, and photograph all protected trees, as defined by the City of Los Angeles, within the proposed pipeline alignment area and write a Protected Tree Report, which will include recommendations to protect the trees during the construction of the project.

Limits of Assignment

This report is based solely on visual inspections of the site and trees on July 16, 2019. The tree inspections were limited to ground level visual observations; root crown inspections and aerial inspections were not conducted. This assignment did not include Tree Risk Assessments.

Purpose and Use of the Report

The purpose of this report is to identify all existing protected trees that could be impacted by the construction and to determine how the trees will be protected during the project. This report is intended to be used by Kennedy Jenks Consultants and the Las Virgenes Municipal Water District to implement the recommendations outlined in it. Upon submission, this report will become the property of Kennedy Jenks Consultants and its use will be at their discretion.

Observations

Site Description

The proposed pipeline alignment site is located in the neighborhood of Chatsworth in the northwestern San Fernando Valley region of the City of Los Angeles at the western edge of Los Angeles County in the Simi Hills. The site is south of Santa Susana Pass and California State Route 118 and west of Topanga Canyon Boulevard. The City of Los Angeles' Chatsworth Park South is located along the southern edge of the western section of the proposed pipeline alignment. The Rockpointe Residential Community is located south of the eastern section of the proposed pipeline alignment and consists of 739 condos and townhomes. The first 17 trees in the Tree Descriptions table are located in the Santa Susana Pass State Historic Park. The vegetation community of the state park is a native oak woodland with sandstone rock outcroppings on the north and west sides of the proposed pipeline alignment. The majority of the remaining trees are located in the City of Los Angeles' Chatsworth Park North. Half of these trees are located in a natural setting with no irrigation, and half are located in a regularly irrigated lawn area. The six off-site trees are located on properties on either side of the proposed alignment along Valley Circle Boulevard. (Site Maps)

Tree Descriptions

Metal number tags were used to identify the protected trees that could be impacted by the proposed construction. The tree locations are indicated on the Site Maps (Appendix A). The photo letter corresponds to Photos (Appendix B). The RAP number refers to The City of Los Angeles Department of Recreation and Parks tree inventory identification number.

	Tree	Name (Scientific and Common)	Photo	Size	Condition	Comments
1	334	*Quercus agrifolia* Coast Live Oak	A	**DBH**: 27+15" Height: 30' Width: 35'	Fair	Deadwood throughout canopy
2	335	*Quercus agrifolia* Coast Live Oak	B	DBH: 30" Height: 30' Width: 35'	Poor	Char on trunk from fire and large cavity on south side of trunk.
3	336	*Quercus agrifolia* Coast Live Oak	C	DBH: 7.5" Height: 10' Width: 15'	Fair	Crown dieback.
4	337	*Quercus agrifolia* Coast Live Oak	D	DBH: 36.5" Height: 30' Width: 50'	Fair	Cavity on west side of trunk.
5	338	*Quercus agrifolia* Coast Live Oak	E	DBH: 9+7" Height: 20' Width: 20'	Fair	Char on trunk from fire.
6	339	*Quercus agrifolia* Coast Live Oak	F	DBH: 50" Height: 40' Width: 60'	Poor	Lower part of trunk hollow probably due to fire and exfoliating bark. Strong reaction wood has developed around fire damage.
7	340	*Quercus agrifolia* Coast Live Oak	G	DBH: 10+11" Height: 20' Width: 20'	Fair	Competition by surrounding trees with less than 6" DBH.
8	341	*Quercus agrifolia* Coast Live Oak	G	DBH: 7" Height: 20' Width: 15'	Fair	Competition by surrounding trees with less than 6" DBH.
9	342	*Quercus agrifolia* Coast Live Oak	G	DBH: 9" Height: 20' Width: 20'	Fair	Competition by surrounding trees with less than 6" DBH.
10	343	*Quercus agrifolia* Coast Live Oak	H	DBH: 6+7+8" Height: 20' Width: 20'	Fair	Competition by surrounding trees with less than 6" DBH.
11	344	*Quercus agrifolia* Coast Live Oak	H	DBH: 20+16" Height: 35' Width: 45'	Poor	Char and exfoliating bark on trunk from fire.

	Tree	Name (Scientific and Common)	Photo	Size	Condition	Comments
12	345	*Quercus agrifolia* Coast Live Oak	H	DBH: 10" Height: 35' Width: 40'	Fair	Char on trunk due to fire.
13	346	*Quercus agrifolia* Coast Live Oak	I	DBH: 6.5" Height: 20' Width: 20'	Fair	Nursery stakes and ties around tree should be removed.
14	347	*Quercus agrifolia* Coast Live Oak	J	DBH: 655" Height: 40' Width: 55'	Poor	Large limb loss on south side of tree.
15	348	*Quercus agrifolia* Coast Live Oak	K	DBH: 30" Height: 30' Width: 30'	Fair	Large cavity on south side of trunk and limb loss.
16	349	*Quercus agrifolia* Coast Live Oak	K	DBH: 27" Height: 30' Width: 35'	Fair	Next to Tree 348 has codominant limbs with included bark.
17	350	*Quercus agrifolia* Coast Live Oak	L	DBH: 30" Height: 30' Width: 40'	Fair	Limbs laying on large sandstone boulder.
18	351	*Malosma laurina* Laurel Sumac	M	DBH: 9+9+6.5+5" Height: 30' Width: 40'	Fair	Growing into fence and sparse foliage. RAP 83551
19	352	*Quercus agrifolia* Coast Live Oak	M	DBH: 5.5" Height: 20' Width: 15'	Fair	Overcrowded by nearby trees. Remove with mitigation. RAP 83555
20	353	*Platanus racemosa* California Sycamore	M	DBH: 21" Height: 30' Width: 25'	Fair	Signs of decay in limbs, cracks in limbs. RAP 83569
21	354	*Platanus racemosa* California Sycamore	N	DBH: 13" Height: 25' Width: 20'	Poor	Decay in trunk. RAP 83548
22	355	*Quercus agrifolia* Coast Live Oak	O	DBH: 2+2.5" Height: 10' Width: 5'	Good	Remove with mitigation. RAP 83554
23	356	*Quercus ilex* Holly Oak	O	DBH: 7" Height: 25' Width: 20'	Good	Decay in trunk. RAP 83570
24	357	*Platanus racemosa* California Sycamore	P	DBH: 7.5+9" Height: 30' Width: 25'	Good	Tree is within 5 feet of alignment centerline. RAP 83549
25	358	*Quercus agrifolia* Coast Live Oak	P	DBH: 15" Height: 20' Width: 25'	Fair	DBH measured 24 inches above ground. Tree growing into fence. RAP 83553

	Tree	Name (Scientific and Common)	Photo	Size	Condition	Comments
26	359	*Pinus canariensis* Canary Island Pine	Q	DBH: 23.5" Height: 40' Width: 40'	Fair	Curved trunk. Prune branches for alignment clearance. RAP 83571
27	360	*Pinus canariensis* Canary Island Pine	R	DBH: 19" Height: 50' Width: 30'	Fair	High percentage of brown needles. RAP 4797
28	361	*Quercus agrifolia* Coast Live Oak	R	DBH: 25+20+19+ 8" Height: 35' Width: 50'	Fair	Bulges near base indicate decay but dense reaction wood is also present. RAP 4796
29	362	*Platanus racemosa* California Sycamore	S	DBH: 16.5" Height: 30' Width: 15'	Poor	Dieback throughout canopy. Remove without mitigation. RAP 83550
30	363	*Platanus racemosa* California Sycamore	S	DBH: 9.5" Height: 25' Width: 15'	Poor	Dieback throughout canopy. Remove without mitigation. RAP 83552
31	364	*Quercus agrifolia* Coast Live Oak	T	DBH: 18+13.5" Height: 30' Width: 35'	Fair	Sparse foliage. RAP 4798
32	365	*Quercus agrifolia* Coast Live Oak	T	DBH: 48" Height: 40' Width: 60'	Fair	Buried root crown, signs of decay in branches. Mitigate for branch removal. RAP 83572
33	366	*Platanus racemosa* California Sycamore	T	DBH: 17.5+5.5" Height: 40' Width: 35'	Poor	Competition with Tree 365 and decay column in trunk. RAP 66869
34	367	*Quercus agrifolia* Coast Live Oak	U	DBH: 26+24+20.5 +18.5" Height: 25' Width: 50'	Fair	Some branch dieback, signs of decay in trunks and stems. Mitigate for branch removal. Tunnel beneath roots. RAP 4803
35	368	*Pinus canariensis* Canary Island Pine	V	DBH: 10" Height: 30' Width: 20'	Fair	Codominant scaffold limbs. RAP 9618
36	369	*Pinus canariensis* Canary Island Pine	V	DBH: 10" Height: 25' Width: 15'	Good	RAP 9609
37	370	*Pinus canariensis* Canary Island Pine	V	DBH: 11.5" Height: 25' Width: 15'	Fair	Poor branch structure. RAP 9608

	Tree	Name (Scientific and Common)	Photo	Size	Condition	Comments
38	371	*Pinus canariensis* Canary Island Pine	V	DBH: 10" Height: 20' Width: 15'	Good	RAP 9607
39	372	*Pinus canariensis* Canary Island Pine	V	DBH: 9" Height: 20' Width: 10'	Fair	Sparse needles. Slight lean. RAP 9606
40	373	*Cinnamomum camphora* Camphor Tree	W	DBH: 7.5" Height: 15' Width: 15'	Good	RAP 9603
41	374	*Platanus racemosa* California Sycamore	X	DBH: 25+45+40" Height: 65' Width: 60'	Fair	Exposed roots, vertical cracks on trunk and branches. RAP 6305
42	375	*Platanus racemosa* California Sycamore	X	DBH: 45" Height: 65' Width: 60'	Good	Self-correcting lean. RAP 6306
43	376	*Platanus racemosa* California Sycamore	X	DBH: 45" Height: 65' Width: 60'	Good	Some exposed roots and curve in trunk. RAP 6307
44	377	*Platanus racemosa* California Sycamore	X	DBH: 27" Height: 65' Width: 60'	Fair	Codominant scaffold limb with decay in center. RAP 6331
45	378	*Platanus racemosa* California Sycamore	X	DBH: 38" Height: 60' Width: 60'	Fair	Self-correcting lean. RAP 6308
46	379	*Pinus torreyana* Torrey Pine	Y	DBH: 45" Height: 70' Width: 60'	Fair	Competition with Tree 380, deadwood throughout canopy. RAP 6332
47	380	*Pinus canariensis* Canary Island Pine	Y	DBH: 34" Height: 70' Width: 60'	Fair	Competition with Tree 379. RAP 6333
48	381	*Platanus racemosa* California Sycamore	Y	DBH: 27.5" Height: 25' Width: 30'	Fair	Main leader removed. RAP 9602
49	382	*Quercus agrifolia* Coast Live Oak	Z	DBH: 25.5+14" Height: 30' Width: 35'	Fair	Buried root crown, decay throughout canopy, woodpecker damage. RAP 83510
50	383	*Quercus lobata* Valley Oak	Z	DBH: 59.5" Height: 50' Width: 80'	Fair	Buried root crown, decay and deadwood throughout canopy. RAP 83509

	Tree	Name (Scientific and Common)	Photo	Size	Condition	Comments
51	OS1	*Quercus lobata* Valley Oak	OS1	DBH: N/A Height: 60' Width: 75'	Fair	Hangs over sidewalk and Valley Circle Blvd. East side of road.
52	OS2	*Quercus agrifolia* Coast Live Oak	OS2 and OS3	DBH: N/A Height: 25' Width: 35'	Fair	Hangs over sidewalk and road. Fence between tree and sidewalk. Limited soil volume. West side of road.
53	OS3	*Quercus agrifolia* Coast Live Oak	OS2 and OS3	DBH: N/A Height: 25' Width: 25'	Fair	Hangs over sidewalk and road. Fence between tree and sidewalk. Limited soil volume. West side of road.
54	OS4	*Quercus agrifolia* Coast Live Oak	OS4	DBH: N/A Height: 25' Width: 35'	Fair	Tree is on east side of a chain-link fence. The fence is embedded in trunk of tree. Tree hangs over sidewalk. Limited soil volume. West side of road.
55	OS5	*Quercus agrifolia* Coast Live Oak	OS5	DBH: N/A Height: 30' Width: 30'	Fair	Tree is on east side of a chain-link fence. The fence is embedded in trunk of tree. Tree hangs over sidewalk. Limited soil volume. West side of road.
56	OS6	*Quercus agrifolia* Coast Live Oak	OS6	DBH: N/A Height: 40' Width: 60'	Fair	Deadwood throughout canopy. East side of road.

Discussion

Tunneling Under the Root System

Based upon the pipeline alignment provided by Kennedy Jenks for this project, tunneling under the root system of Tree 367 should take place because the canopy is 50 feet wide and trenching through the dripline for the pipeline would damage the roots (see Site Map, page 15).

Boring machines that tunnel under the root system and allow the installation of the pipeline without severing the roots are a good alternative to trenching. The tunneling needs to begin and end a minimum of ten feet from the edge of the dripline and at a minimum depth of three feet beneath the existing grade. The tunneling should be a minimum distance of twenty feet away from the trunk of the tree. (Fite and Smiley, 2008)

Change in Grade

The existing grade will not change within the dripline of the protected trees.

The lowering or raising of the grade within the dripline can damage or kill a tree. The normal exchange of moisture and gases within the dripline is disrupted with the change in grade. The original grade should be maintained as far out from the trunk as possible. As little as four inches

of soil placed over the root system can kill some species. The change in grade can have immediate or long-term adverse effects on the tree. (Matheny and Clark, 1998)

Mechanical Damage

Mechanical damage to the protected trees could occur from construction equipment or materials.

Wounds to tree branches and trunks caused by mechanical damage may reduce tree stability by decreasing the wood strength, the internal movement of water and nutrients, and the ability to defend against decay. Enclosing the dripline with fencing prior to construction will help prevent damage from construction equipment. (Fite and Smiley, 2008)

Trenching

Trenching for the pipeline will occur within the outer edge of the dripline of 15 protected trees.

Trenching within the dripline can damage the the root system of a tree and lead to tree decline or death. Ninety percent of the fine roots that absorb water and minerals are found in the upper few inches of soil. Roots require space, air, and water, and grow best where these requirements are met, which is usually at or near the soil surface. When roots are cut due to trenching, the cut should be clean, leaving no torn edges. Tunneling should be used to preserve roots two inches in diameter or greater and, wherever possible, underground lines should occupy common trenches. (Matheny, et al, 1998)

Soil Compaction

There is potential for soil compaction caused by construction equipment, storage of building materials, and foot and vehicle traffic within the dripline of the protected trees.

Soil compaction occurs when the pore space between soil particles is greatly reduced. This causes the reduction of oxygen available to the roots and can lead to decline in trees. Use of equipment, trenching, grading, digging, walking paths, and roads can cause soil compaction in a construction area. Use of protective fencing, mulching within the protective fencing, and limiting the amount of access routes will minimize soil compaction. (Matheny, et al, 1998)

Pruning

Pruning will be needed on some protected trees to allow for construction clearance.

Any pruning needed should be performed by a Certified Arborist and will follow the most recent Tree Pruning Guidelines (International Society of Arboriculture) and/or the ANSI A300 Pruning Standard and the most recent edition of ANSI Z133.1.

Mitigation for Pruning and Removal of Protected Trees

Based upon the pipeline alignment provided by Kennedy Jenks for this project, Trees 362 and 363, both California sycamores, will need to be removed for the installation of the new pipeline. The removal of these trees does not require mitigation planting because they are declining and are mostly dead. Trees 352 and 355, both coast live oaks, will need to be removed for the project and their removal will require mitigation. The pruning of branches on some coast live oaks to allow for construction clearance will also require mitigation. The removal of the four protected trees will take place in Chatsworth Park North. No Protected Trees will be removed in the Santa Susana Pass State Historic Park.

The City of Los Angeles Department of Recreation and Parks will allow some trees that are dead or in poor health to be removed without expecting any mitigation; however, any healthy tree removed will require full mitigation. Mitigation trees must be one tree in kind for every inch in diameter of the removed tree. For example, a tree with a 6-inch trunk diameter will be replaced with either a single tree with a 6-inch trunk diameter or several trees with total trunk diameter of at least 6 inches. Affected trees must be measured at 4 1/2 feet above ground level to determine the size of their replacement. Any limbs from protected oak trees that are removed for construction clearance, will require the same mitigation planting as a removed tree, for every inch in diameter of the removed branch. Replacement trees shall have a minimum DBH of one-quarter inch.

Conclusion

The LVMWD is planning a project for the Twin Lakes Pump Station Pipeline Project, which involves the installation of a new 16-inch diameter transmission pipeline. The proposed project is within Santa Susana Pass State Historic Park, Chatsworth Park South, and Chatsworth Park North. JTL Consultants surveyed the area and found 23 Protected Trees outside of Chatsworth Park North and 33 trees within Chatsworth Park North that could be impacted by the proposed construction. JTL Consultants inventoried and mapped 56 protected trees. Based upon the pipeline alignment provided by Kennedy Jenks for this project, two California sycamores will need to be removed, but will not require mitgation planting. Two coast live oaks will need to be removed and will require mitigation planting. Several coast live oaks will need to have limbs removed to allow for construction clearance and will require mitigation planting. Recommended tree protection measures to help minimize the impacts of the construction on the trees include pruning, fencing, change in grade avoidance, and construction monitoring.

Recommendations

The pipeline contractor shall follow the recommendations, outlined below, to minimize the impacts to the Protected Trees before and during the construction.

1. Install protective fencing ten feet from the center of the pipeline on both sides of the pipeline, as shown in Appendix A – Site Maps. The protective fencing will remain in place throughout the duration of the construction. The exact location of the fencing around the trees will be determined in the field at the time of the fence installation.
    a. The fencing will be chain-link and will be at least five feet tall. The fence will be mounted on two-inch diameter galvanized iron posts, driven into the ground to a depth of at least two feet at no more than ten feet spacing. Orange flexible fencing shall not be used.
    b. There will be no storage of building materials, waste, excess soil, and no digging, trenching, or other soil disturbance within the tree fence enclosure areas.
    c. The project arborist will be present when tree protection fencing is installed.
2. Remove Trees 362 and 363, California sycamores; mitigation planting is not required.
3. Remove coast live oaks, Trees 362 and 363 and comply with the mitigation planting requirements of the City of Los Angeles Department of Recreation and Parks.
4. Prune branches on coast live oaks, Trees 365 and 367, for construction clearance and comply with the mitigation planting requirements of the City of Los Angeles Department of Recreation and Parks.
    a. Pruning cuts shall comply with the most current ANSI A300 pruning standard and work shall be performed in accordance with the ANSI Z133.1 operations standard.
    b. Pruning shall comply with ISA's Best Management Practices: Tree Pruning.
    c. All pruning will be performed under the supervision of an ISA Certified Arborist.
5. Tunnel beneath the roots of Tree 367. The tunneling will begin and end a minimum of ten feet from the edge of the dripline, a minimum depth of three feet beneath the existing grade. The tunneling will be a minimum distance of twenty feet away from the trunk of the tree.
6. Mitigate for the removal of:
    a. Tree 352 with a planting of a coast live oak with DBH of 5.5 inches or greater.
    b. Tree 355 with a planting of a coast live oak with a DBH of 4.5 inches or greater.
    c. The planting locations will be determined by the Dept. of Recreation and Parks.
7. Mitigate for the branch removal of Tree 365 and 367 with the planting of two coast live oaks with a DBH equal to or greater than the DBH of the branches removed. The DBH will be determined at the time of the branch removals.

8. The Project Arborist will be present when the protective fencing is installed, when any, tunneling, digging, excavation, or trenching occurs within or near the dripline of the Protected Trees. The arborist will also be present when any grading, construction, demolition, or other work that is expected to encounter tree roots, is performed.

Glossary

Condition: The Condition Rating was classified using the following table.

	Condition Components		
Rating	**Health**	**Structure**	**Form**
Excellent	High vigor and nearly perfect health with little or no twig dieback, discoloration or defoliation.	Nearly ideal and free of **defects**.	Nearly ideal for the species. Generally symmetric. Consistent with the intended use.
Good	Vigor is normal for the species. No significant damage due to diseases or pests. Any twig dieback, defoliation, or discoloration is minor.	Well-developed structure. Defects are minor and can be corrected.	Minor asymmetries/deviations from species norm. Mostly consistent with the intended use. Function and aesthetics are not compromised.
Fair	Reduced vigor. Damage due to insects or diseases may be significant and associated with defoliation but is not likely to be fatal. Twig dieback, defoliation, discoloration, and/or dead branches may comprise up to 50% of the crown.	A single defect of a significant nature or multiple moderate defects. Defects are not practical to correct or would require multiple treatments over several years.	Major asymmetries/deviations from species norm and/or intended use. Function and/or intended use. Function and/or aesthetics are compromised.
Poor	Unhealthy and declining in appearance. Poor vigor. Low foliage density and poor foliage color are present. Potentially fatal pest infestation. Extensive twig and /or branch dieback.	A single serious defect or multiple significant defects. Recent change in tree orientation. Observed structural problems cannot be corrected. Failure may occur at any time.	Largely asymmetric/abnormal. Detracts from intended use and/or aesthetics o a significant degree.
Very Poor	Poor vigor. Appears to be dying and in the last stages of life. Little live foliage.	Single or multiple severe defects. Failure is probable or imminent.	Visually unappealing. Provides little or no function in the landscape.
Dead	No living tissue.		

DBH: The diameter of a trunk measured at standard height 4 ½ feet above ground.

Defect: An internal or external point of weakness which can reduce the stability of the tree and include cracks, splits, cankers, galls, girdling, codominant limbs, and wounds.

Dripline: The dripline is the edge or perimeter of the canopy and represents a point where water will drip down to the ground and is an indicator of where the structural and lateral roots can be found.

Protected Tree: As stated in the City of Los Angeles Preservation Ordinance No. 177404, a protected tree is any of the following southern California native tree species, which measures four inches or more in cumulative diameter, four and one-half feet above the ground level at the base of the tree:

(a) Oak tree including Valley Oak (*Quercus lobata*) and California Live Oak (*Quercus agrifolia*), or any other tree of the oak genus indigenous to California but excluding the Scrub Oak (*Quercus dumosa*).

(b) Southern California black walnut (*Juglans californica var. californica*)

(c) Western Sycamore (*Platanus racemosa*)

(d) California Bay (*Umbellularia californica*)

Protected Tree Report: A report required by the City of Los Angeles in accord with Preservation Ordinance No. 177404 for any protected tree that will be impacted by construction.

Bibliography

Fite, Kelby, and Smiley, Thomas E., Best Management Practices, *Managing Trees During Construction*, International Society of Arboriculture, Champaign, IL 2008.

Matheny, Nelda and Clark, James R., *Trees and Development: A Technical Guide to Preservation of Trees during Land Development*, International Society of Arboriculture, Champaign, IL 1998.

Appendix A – Site Maps

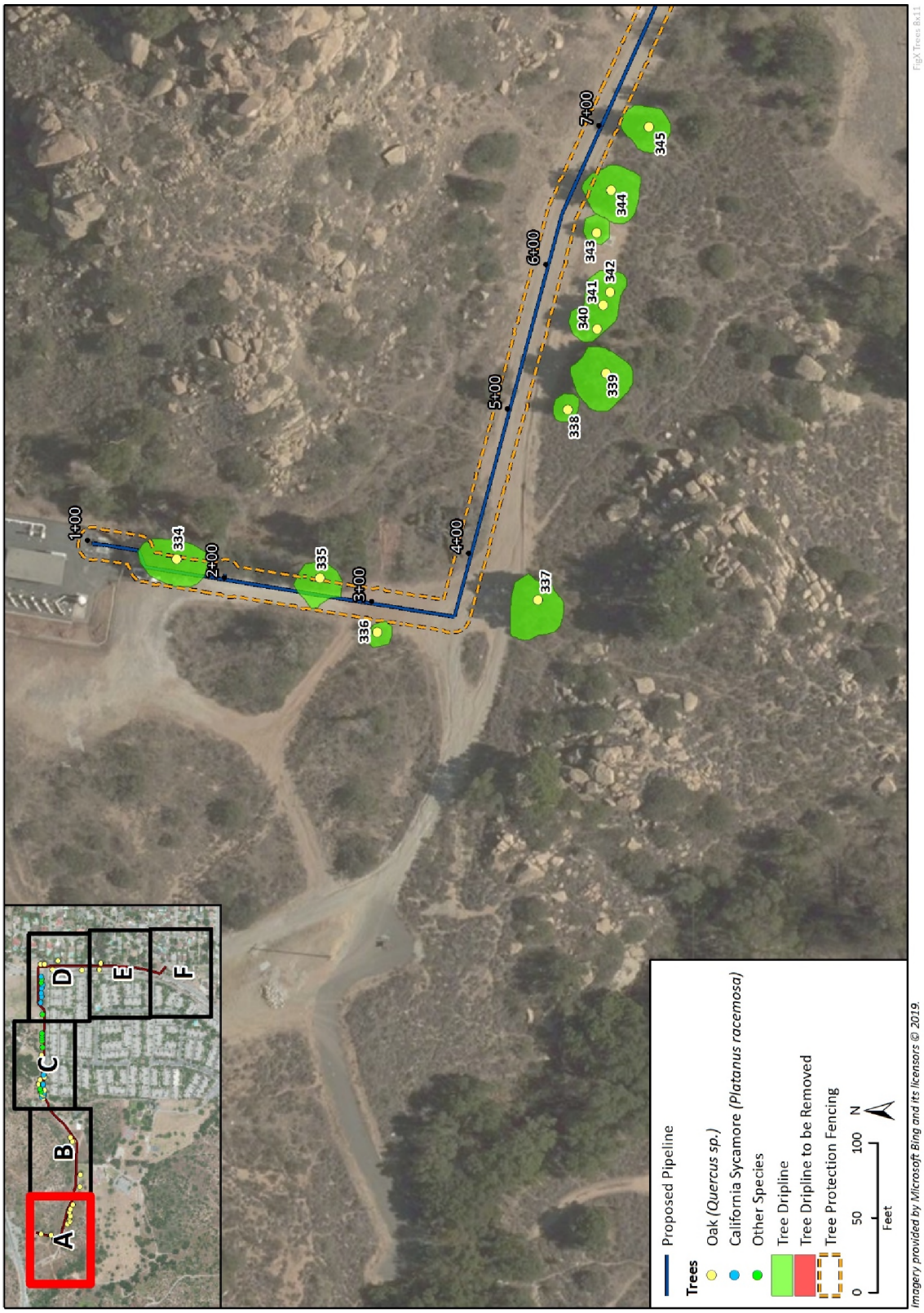

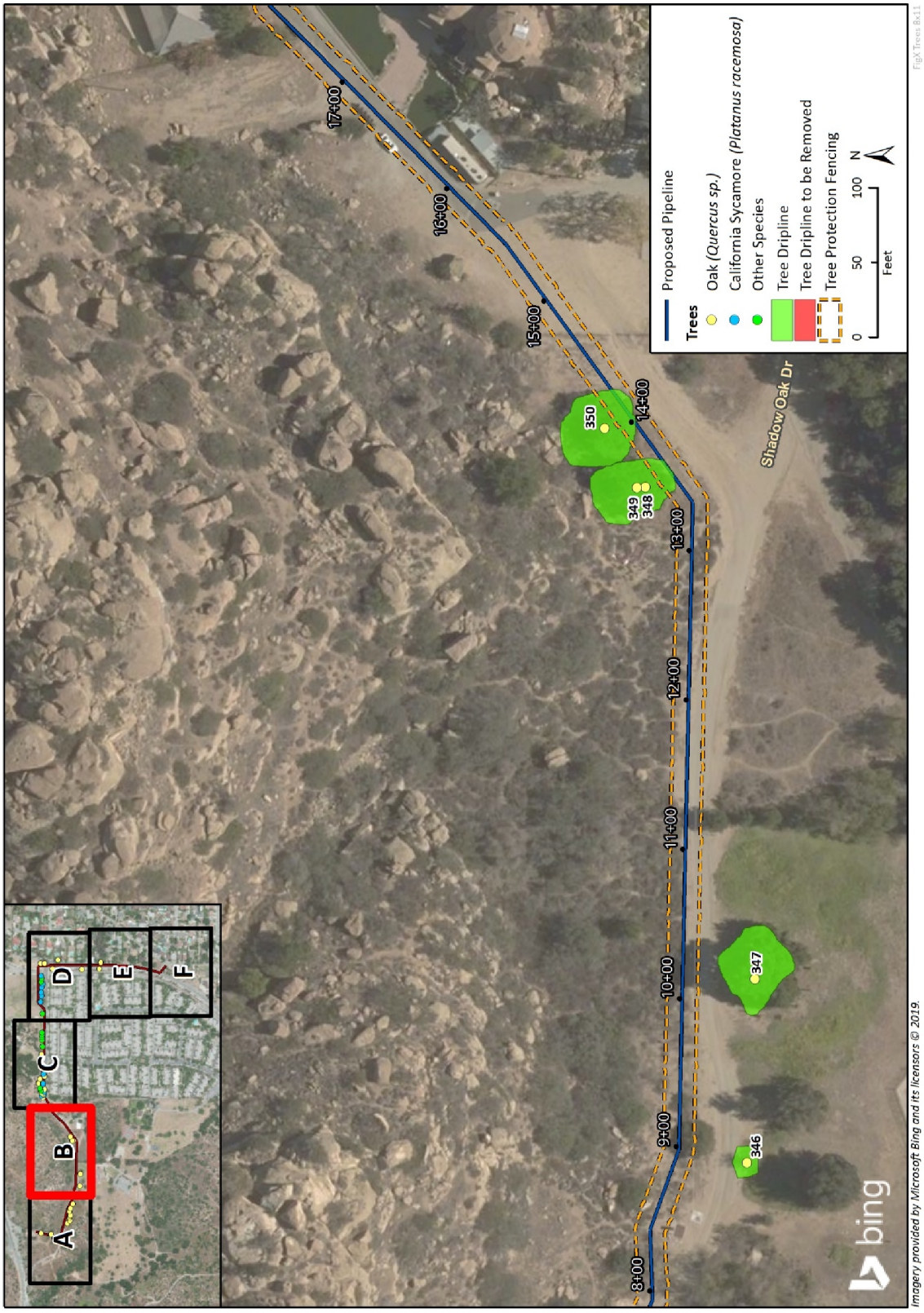
Proposed Pipeline
Trees
Oak (Quercus sp.)
California Sycamore (Platanus racemosa)
Other Species
Tree Dripline
Tree Dripline to be Removed
Tree Protection Fencing
0
50
100
Feet
N
Shadow Oak Dr
8+00
9+00
10+00
11+00
12+00
13+00
14+00
15+00
16+00
17+00
346
347
348
349
350
A
B
C
D
E
F
bing
Imagery provided by Microsoft Bing and its licensors © 2019.


A
B
C
D
E
F
Germain St
Larwin Ave
18+00
19+00
20+00
21+00
22+00
23+00
24+00
25+00
26+00
Proposed Pipeline
Trees
Oak (Quercus sp.)
California Sycamore (Platanus racemosa)
Other Species
Tree Dripline
Tree Dripline to be Removed
Tree Protection Fencing
0 50 100 N
Feet
Imagery provided by Microsoft Bing and its licensors © 2019.

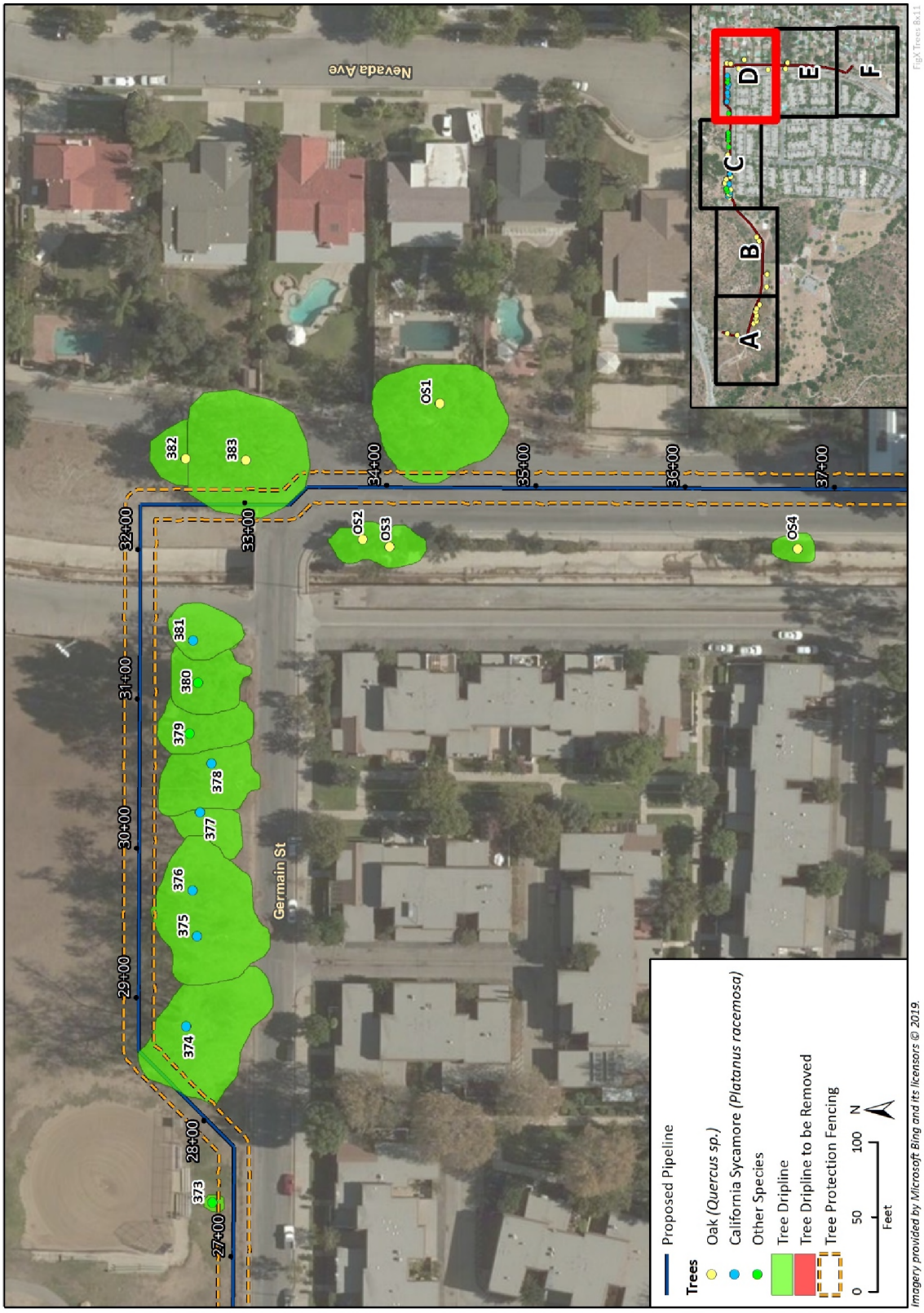
Nevada Ave
Germain St
27+00
28+00
29+00
30+00
31+00
32+00
33+00
34+00
35+00
36+00
37+00
373
374
375
376
377
378
379
380
381
382
383
OS1
OS2
OS3
OS4
A
B
C
D
E
F
Proposed Pipeline
Trees
Oak (Quercus sp.)
California Sycamore (Platanus racemosa)
Other Species
Tree Dripline
Tree Dripline to be Removed
Tree Protection Fencing
0
50
100
Feet
N
Imagery provided by Microsoft Bing and its licensors © 2019.


Antolra Ave
Valley Circle Blvd
James Alan Cir
38+00
39+00
40+00
41+00
42+00
43+00
OS5
OS6
A
B
C
D
E
F
Proposed Pipeline
Trees
Oak (Quercus sp.)
California Sycamore (Platanus racemosa)
Other Species
Tree Dripline
Tree Dripline to be Removed
Tree Protection Fencing
0
50
100
Feet
N
Imagery provided by Microsoft Bing and its licensors © 2019.

Appendix B – Photos



Photo A, Tree 334, facing southeast.



Photo B, Tree 335, facing south.



Photo C, Tree 336, facing southwest.

Photo D, Tree 337, facing southeast.





Photo E, Tree 338, facing southeast.



Photo F, Tree 339, facing southeast.



Photo G, Trees 340, 341, and 342, facing south.

Photo H, Trees 343, 344, and 345, facing south





Photo I, Tree 346, facing southeast.



Photo J, Tree 347, facing southeast.



Photo K, Trees 348 and 349, facing northwest.

Photo L, Tree 350, facing northwest.





Photo M, Trees 351, 352, and 353, facing northwest.



Photo N, Tree 354, facing south.



Photo O, Trees 355 and 356, facing southeast



Photo P, Trees 357 and 358, facing east.



Photo Q, Tree 359, facing southeast.



Photo R, Trees 360 and 361, facing northeast.



Photo S, Trees 362 and 363, facing southeast.



Photo T, Trees 364, 365, and 366, facing southwest.



Photo U, Tree 367, facing east.



Photo V, Trees 368 through 372, facing south.



Photo W, Tree 373, facing south.

Photo X, Trees 374 through 378, facing southeast.





Photo Y, Trees 379, 380, and 381, facing south.

Photo Z, Trees 382 and 383, facing south.





Photo OS1, facing south.

Photo OS2 and OS3, facing west.





Photo OS4, facing west.



Photo OS5, facing west



Photo OS6, facing east

Appendix C – Assumptions and Limiting Conditions

1. Any legal description provided to the consultant/appraiser is assumed to be correct. Any titles and ownerships to any property are assumed to be good and marketable.
2. Care has been taken to obtain all information from reliable sources. All data has been verified insofar as possible for the accuracy of information provided by others.
3. The consultant/appraiser shall not be required to give testimony or attend court by reason of this report unless subsequent contractual arrangements are made, including payment of an additional fee for such services as described in the fee schedule and contract of engagement.
4. Loss or alteration of any part of this report invalidates the entire report.
5. Possession of this report or a copy thereof does not imply right of publication or use for any purpose by any other than the person to whom it is addressed, without the prior expressed written consent of the consultant/appraiser.
6. This report and values expressed herein represent the opinion of the consultant/appraiser, and the consultant's/appraiser's fee is in no way contingent upon the reporting of a specified value, a stipulated result, the occurrence of a subsequent event, nor upon any finding to be reported.
7. Sketches, diagrams, graphs, and photographs in this report, being intended as visual aids, are not necessarily to scale and should not be construed as engineering or architectural reports or surveys.
8. The tree location(s) on the Tree Survey Map, the Aerial Image, and the Tree Preservation and Replacement Plan are not represented to be of survey quality but are sufficient to allow locating the tree in the field.
9. Unless expressed otherwise: 1) information contained in this report covers only those items that were examined and reflects the condition of those items at the time of inspection; and 2) the inspection is limited to visual examination of accessible items without dissection, excavation, probing, or coring. There is no warranty or guarantee, expressed or implied, that problems or deficiencies of the trees or property in question may not arise in the future.
10. Unless specifically stated, Tree Risk Assessments were not conducted on the trees described in this report and JTL Consultants is not responsible for the consequences of any risk associated with the trees, either inferred or implied.

Appendix D – Certificate of Performance

We, Jeannine and Ted Lubeshkoff, certify:

- ✓ That we have personally inspected the tree(s) referred to in the report, and have stated our findings accurately. The extent of the evaluation is stated in the attached report;
- ✓ That we have no current or prospective interest in the vegetation or the property that is the subject of this report and have no personal interest or bias with respect to the parties involved;
- ✓ That the analysis, opinions and conclusions stated herein are our own and are based on current scientific procedures and facts;
- ✓ That our analysis, opinions and conclusions were developed and this report has been prepared according to commonly accepted arboriculture practices;
- ✓ That no one provided significant professional assistance to us, except as indicated within the report;
- ✓ That our compensation is not contingent upon the reporting of a predetermined conclusion that favors the cause of the client or any other party nor upon the results if the assignment, the attainment of stipulated results, or the occurrence of any subsequent events.

I further certify that I, Jeannine Lubeshkoff, am Registered Consulting Arborist #500 with the American Society of Consulting Arborists, and Certified Arborist WE-8445A with the International Society of Arboriculture. I have been involved in the practice of arboriculture and the care and study of trees for over 20 years.

Signed 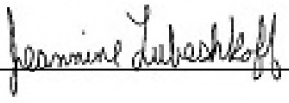 Date 7/31/2019

I further certify that I, Ted Lubeshkoff, am Registered Consulting Arborist #513 with the American Society of Consulting Arborists, and Certified Arborist WE-8446A with the International Society of Arboriculture. I have been involved in the practice of arboriculture and the care and study of trees for over 25 years.

Signed 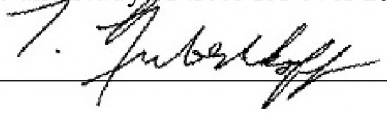 Date 7/31/2019

JTL Consultants
Consulting Arborists and Botanists
952 Buena Vista Street • Duarte, CA 91010
(626) 358-5690 • info@JTLconsultants.com

Rare Plant Survey Report
Las Virgenes Municipal Water District
Twin Lakes Pump Station Pipeline Project
Santa Susana Pass Historic Park
Chatsworth, Los Angeles County, California

Prepared For:
Kennedy Jenks Consultants
2775 North Ventura Road, Suite 100
Oxnard, CA 93036
(805) 973-5700

Prepared By:
Jeannine Lubeshkoff
Jeannine@JTLconsultants.com

July 28, 2019

Table of Contents

Executive Summary **1**
1.0 INTRODUCTION **1**
1.1 Project Area Description 1
1.1.1 Biological Communities 2
1.1.2 Soils 3
1.2 Survey Information 3
1.2.1 Surveyor Qualifications 3
2.0 METHODS **4**
2.1 Background Data 4
2.2 Field Surveys 6
2.2.1 Rare Plant Survey 6
2.2.2 Reference Sites 7
3.0 RESULTS **7**
3.1 Field Survey Results 7
4.0 SUMMARY **7**
5.0 REFERENCES **8**
APPENDIX A - Maps **9**
Project Area 9
Survey Area 10
Vegetation Communities 10
Soils 11
Reference Site 11
APPENDIX B – List of Species Observed in the Project Area **12**
APPENDIX C – Representative Photos of the Project Area **15**
APPENDIX D – Restoration Notes **18**

Executive Summary

Las Virgenes Municipal Water District (LVMWD) has planned construction for the Twin Lakes Pump Station Pipeline Project. This project involves the installation of a new 16-inch diameter transmission pipeline that will serve as a back-up water source in the event of interruption of water service on LVMWD's West Valley Feeder #2 Pipeline. The installation of a new 16-inch pipeline, less than one mile in length, will ensure that increased demands are met during any outage of the West Valley Feeder #2. Approximately 1,400 feet of the proposed pipeline is located within the State of California Santa Susana Pass Historic Park. The park requires that a Rare Plant Survey be conducted within this section of the proposed project.

JTL Consultants conducted a floristic, protocol-level rare plant survey within the Santa Susana Pass Historic Park on July 15, 2019. Prior to the field survey effort, JTL Consultants reviewed the California Native Plant Society (CNPS), the United States Fish and Wildlife Service (USFW), and the California Natural Diversity Database (CNDDB) lists to determine which species have been documented in the vicinity of the Project Area. Based on a review of occurrence records, and a comparison of species habitat requirements with Project Area conditions, it was determined that one rare plant species, Santa Susana tarplant (*Deinandra minthornii*), has high potential to occur within the Project Area.

Surveys were conducted by trained botanists familiar with the flora of Southern California. The surveys were conducted using wandering transects and were floristic in nature (i.e. all plants observed were identified to the lowest level possible to determine rarity, often subspecies or variety). No state or federally listed plant species were observed within the Project Area and no potentially sensitive biological community was identified within the Project Area.

1.0 Introduction

JTL Consultants conducted a floristic, protocol-level rare plant survey along the proposed Project Area within the Santa Susana Pass Historic Park on July 15, 2019. The Project Area is in the City of Chatsworth, Los Angeles County, California (Appendix A – Maps). The survey date corresponds to the peak bloom periods of the species that was considered to have potential to occur within the Project Area.

1.1 Project Area Description

The survey area was 50 feet from either side of the pipeline alignment and is in the eastern section of the Santa Susana State Historic Park situated at about 1,000 feet above mean sea level. This is a native oak woodland with sandstone rock outcroppings on the north and west sides of the proposed pipeline alignment. The proposed pipeline alignment site is in the neighborhood of Chatsworth in the northwestern San Fernando Valley region of the City of Los Angeles at the western edge of Los Angeles County in the Simi Hills. The site is south of the Santa Susana Pass and the California State Route 118 and west of Topanga Canyon Boulevard. The City of Los Angeles' Chatsworth Park South is located along the southern edge of the western section of the proposed pipeline alignment. The Rockpointe Residential Community is located south of the

eastern section of the proposed pipeline alignment and consists of 739 condos and townhomes.

1.1.1 Biological Communities

A total of four biological communities were observed in the Project Area. Biological communities follow Holland nomenclature (Holland 1986) with the addition of non-vegetated mapping units, and are described in detail below and shown in Appendix A. No rare vegetation types were identified within the project area.

Coastal Oak Woodland
Coastal oak woodlands occupy a variety of Mediterranean type climates and are extremely variable. The overstory consists of deciduous and evergreen hardwoods occasionally mixed with conifers. In drier sites, trees are widely spaced and form an open woodland or savannah. Understory species vary depending on habitat conditions (soil, moisture regimes, etc.) and habitats juxtaposition to oak woodlands. Understory species composition is typically composed of grasses with scattered shrubs. Coast live oak (*Quercus agr.folia*) is usually found on moisture sites and extends further inland in southern California.

In the Park, coastal oak woodlands are dense to open woodlands dominated by coast live oak. The shrub layer is poorly developed and includes poison oak (*Toxicodendron diversilobum*) and laurel sumac, toyon (*Heteromeles arbut.folia*), gooseberry (*Ribes* sp.), and occasionally Mexican elderberry (*Sambucus mexicana*).

Coastal Sage Scrub
Coastal sage scrub systems are characterized by low- to moderate- sized shrubs with mesophytic leaves, flexible branches, semiwoody stems, and a shallow root system. Southern coastal scrub stands consist of a shrub layer up to 2 meters (7 ft) tall. Canopy cover usually approaches 100 percent but can be continuous or intermittent with bare areas present.

The dominant over story species in the Park is laurel sumac (*Malosma laurina*) with lemonade berry (*Rhus integr.folia*) also present. Common understory species include black sage, California sage (*Artemisia cal.fornica*), white sage (*Salvia apiana*), California buckwheat, and deerweed (*Lotus scoparius*). Coastal sage scrub is found throughout the Park.

Disturbed/Developed
The disturbed/developed map units are comprised of the unvegetated dirt roadbed along with adjacent areas which are entirely composed of non-native vegetation characteristic of disturbed areas. Shortpod mustard (*Hirsl.feldia incana*) dominates the road margins along with other non-native species such as tree tobacco (*Nicotiana glauca*), tocalote (*Centaurea melitensis*) and red brome (*Bromus madritensis rubens*).

Southern Willow Scrub
Southern willow scrub is comprised of dense stands of shrubby willows, typically in association with mule fat (*Baccharis salic.folia*) and scattered emergent conttonwood and sycamore. This early seral community is generally maintained by periodic flooding or other disturbances.

On site, there is one small thicket of arroyo willow (*Salix lasiolepis*) south of the dirt road near the center of the study area.

1.1.2 Soils

Two soil series are found on the project area, and their distribution on this property is displayed in Appendix A as mapped by the NRCS Web Soil Survey (NRCS 2019) and described below.

Anacapa-Urban land complex, 0 to 2 percent slopes are soils that have developed predominantly from sedimentary rock sources and are found in flood plans and on alluvial fans. This is a well-drained soil with a grayish brown to dark grayish brown topsoil consisting of a sandy loam, fine sandy loam, or light loam. Depth of carbonate can range from 20 to 40 inches and there can be filaments of lime and other limestone segregations.

Rock outcrop-Gaviota complex, 30 to 75 percent slopes are soils that are derived from hard sandstone or meta-sandstone and are generally very shallow well drained soils. Gaviota soils occur on hills and mountains and commonly contain rock outcrops. Soil texture ranges from a fine sandy loam to a gravelly loam.

1.2 Survey Information

1.2.1 Surveyor Qualifications

Individuals who conducted the surveys each have formal training in botany and have extensive experience working in Southern California. The July 15, 2019, survey was conducted by two biologists that each have extensive training in botany and vegetation ecology and have previous protocol-level rare plant survey experience. The qualifications of the biologists are summarized below.

Jordan Zylstra, BS, Plant Biologist. Jordan received a Bachelor of Science degree in Resource Ecology and Management from the University of Michigan, Ann Arbor. He has worked in a wide variety of habitats in California. His experience includes rare plant surveys, plant community mapping, invasive species management, forest plot mapping, post-fire recovery monitoring, native seed collection, restoration planting, and mitigation land monitoring. Jordan has worked for a variety of private, and government organizations including the United States Forest Service.

Jeannine Lubeshkoff, BS, Arborist and Plant Biologist. Jeannine received a Bachelor of Science degree in Ecology and Systematic Biology from CalPoly, San Luis Obispo, where her studies focused on ecology and taxonomy with an emphasis on botany. Jeannine has worked as an arborist and botanist for municipalities, developers, non-profits, environmental consulting firms, and government agencies. She has conducted floristic and invasive plant species surveys for the Tehachapi Renewable Transmission Project in the San Gabriel Mountains.

2.0 Methods

2.1 Background Data

Rare plants are defined here to include: (1) all plants that are federal- or state-listed as rare, threatened or endangered, (2) all federal and state candidates for listing, (3) all plants included in Ranks 1 through 4 of the CNPS Inventory of Rare, Threated, and Endangered Plants of California (Inventory; CNPS 2019a), and (4) plants that qualify under the definition of "rare" in the California Environmental Quality Act (CEQA), section 15380.

A background information search was conducted to identify potential rare plant species that may occur in the Project Area vicinity. Database searches were conducted for known occurrences of rare species in the Oat Mt, Canoga Park, Calabasas, and Simi Valley East USGS 7.5-minute quadrangles (USGS 2019a-i) and results are displayed in the table below. Sources included:

- California Natural Diversity Database (CDFW 2019)
- CNPS Inventory (CNPS 2019a)

Scientific Name **Common Name**	**Status**		**Flowering Period**	**Habitat**	**Potential to Occur**
Astragalus brauntonii Braunton's milkvetch	Fed: State: CRPR:	FE -- 1B.1	Jan-Aug	Perennial herb found in recent burns or disturbed areas, usually sandstone with carbonate layers in Chaparral, Coastal scrub, Valley and foothill grassland. 10-2,100 ft.	Potential: Suitable habitat exists on the Project.
Calochortus clavatus var. gracilis slender mariposa lily	Fed: State: CRPR:	-- -- 1B.2	Mar-Jun	Perennial bulbiferous herb found in Chaparral, Coastal scrub, Valley and foothill grassland. 1,045-3,280 ft.	Potential: Suitable habitat exists on the Project.
Calochortus fimbriatus late-flowered mariposa lily	Fed: State: CRPR:	-- -- 1B.3	Jun-Aug	Perennial bulbiferous herb found often on serpentinite in Chaparral, Cismontane woodland, Riparian woodland. 900-6,250 ft.	Low Potential: No serpentine soils were identified on the Project.
Chorizanthe parryi var. fernandina San Fernando Valley spineflower	Fed: State: CRPR:	FC CE 1B.1	Apr-Jul	Annual herb found in Coastal scrub (sandy), Valley and foothill grassland. 490-4,005 ft.	Potential: Suitable habitat exists on the project.

Scientific Name Common Name	Status		Flowering Period	Habitat	Potential to Occur
Deinandra minthornii Santa Susana tarplant	Fed: State: CRPR:	-- CR 1B.2	Jul-Nov	Perennial deciduous shrub found in rocky areas of Chaparral, Coastal scrub. 915-2,935 ft.	High Potential: Suitable habitat exists on the Project, and there are records approximately 1,000 feet north of the site.
Dudleya blochmaniae ssp. blochmaniae Blochman's dudleya	Fed: State: CRPR:	-- -- 1B.1	Apr-Jun	Perennial herb found in rocky, often clay or serpentinite in Coastal bluff scrub, Chaparral, Coastal scrub, Valley and foothill grassland. 15-1,475 ft.	Low Potential: No clay or serpentine soils were identified on the Project.
Dudleya cymosa ssp. agourensis Agoura Hills dudleya	Fed: State: CRPR:	FT -- 1B.2	May-Jun	Perennial herb found in rocky, volcanic areas of Chaparral, Cismontane woodland. 655-1,640 ft.	Low Potential: No suitable habitat exists on the Project.
Dudleya multicaulis many-stemmed dudleya	Fed: State: CRPR:	-- -- 1B.2	Apr-Jul	Perennial bulbiferous herb found often in clay in Chaparral, Coastal scrub, Valley and foothill grassland. 45-2,590 ft.	Low Potential: No clay soils were identified on the project.
Horkelia cuneata var. puberula slender mariposa lily	Fed: State: CRPR:	-- -- 1B.1	Feb-Jul	Perennial herb found in sandy or gravelly areas of Chaparral (maritime), Cismontane woodland, Coastal scrub. 225-2,655 ft.	Potential: Suitable habitat exists on the project
Lasthenia glabrata ssp. coulteri Coulter's goldfields	Fed: State: CRPR:	-- -- 1B.1	Feb-Jun	Annual herb found in Marshes and swamps (coastal salt), Playas, Vernal pools. 0-4,005 ft.	Low Potential: No suitable wetland habitat exists on the project.
Lupinus paynei Payne's bush lupine	Fed: State: CRPR:	-- -- 1B.1	Feb-Apr	Perennial shrub found in sandy Coastal scrub, Riparian scrub, Valley and foothill grassland. 720-1,380 ft.	Potential: Suitable habitat exists on the project.
Navarretia ojaiensis Ojai navarreita	Fed: State: CRPR:	-- -- 1B.1	May-Jul	Annual herb found in Chaparral (openings), Coastal scrub (openings), Valley and foothill grassland. 900-4,180 ft.	Potential: Suitable habitat exists on the project.
Nolina cismontana chaparral nolina	Fed: State: CRPR:	-- -- 1B.2	May-Jul	Perennial evergreen shrub found in sandstone or gabbro areas of Chaparral, Coastal scrub. 455-4,185 ft.	Potential: Suitable habitat exists on the project.

Federal:
FE = Listed as endangered under the Federal Endangered Species Act
FT = Listed as threatened under the Federal Endangered Species Act
FC = Candidate for listing under the Federal Endangered Species Act
-- = No Listing
State:
SE = Listed as endangered under the California Endangered Species Act
ST = Listed as threatened under the California Endangered Species Act
SP = Proposed for listing under the California Endangered Species Act
CR = California listed as rare
-- = No Listing
CRPR = California Rare Plant Rank:
1A = Plants presumed extinct in California
1B = Plants rare and endangered in California and throughout their range
2 = Plants rare, threatened, or endangered in California but more common elsewhere in their range
3 = Plants about which more information is needed; a review list
4 = Plants of limited distribution; a watch list

One rare plant species, the Santa Susana tarplant, was identified as a plant with high potential to occur in the Project Area.

Santa Susana tarplant (*Deinandra minthornii*). Rank 1B.2

Santa Susana tarplant is a deciduous perennial herb or subshrub in the sunflower (Asteraceae) family that can grow to about 1 meter in height and blooms between July and November. It is typically found on sandstone in chaparral and coastal sage scrub between elevations of about 650 to 2600 feet. Its range is mostly limited to the Santa Susana and Santa Monica Mountains of Los Angeles and Ventura Counties. (Baldwin et al. 2012). There are numerous known occurrences of the species within the Park, with the closest previously mapped location occurring about 1,000 feet north of the project area.

2.2 Field Surveys

2.2.1 Rare Plant Surveys

Floristic, protocol-level rare plant surveys were conducted on July 15, 2019. The survey entailed walking the entirety of the Project Area plus 50 feet on either side of the proposed alignment, with a disproportionate focus in areas thought to be suitable for rare species and sensitive natural communities. The survey date corresponds to the peak blooming period for observing and accurately identifying the one rare plant species identified as having high potential to be present in the Project Area.

The surveyors followed the protocol for plant surveys described in recommended resource agency guidelines (CNPS 2001, CDFG 2000, CDFG 2009, USFWS 1996). All plants were identified using the Jepson eFlora (Jepson Flora Project 2019), to the taxonomic level necessary to determine whether they were rare. Names given follow the Jepson Manual (Baldwin et al. 2012). Sensitive natural communities were identified following *A Manual of California Vegetation, Online Edition* (CNPS 2019b), the California Fish and Game Code, or other applicable regulations. Plant surveys were floristic in nature with all observed species recorded and included on a species list provided in Appendix B. All rare plant populations and sensitive natural

community locations were mapped using a combination of handheld Global Positioning System equipment with sub-meter accuracy and interpretation of recent aerial imagery (Google Earth 2019) based on field observations.

2.2.2 Reference Sites

A reference site, known to have the Santa Susana tarplant present, was observed on July 15, 2019, because the rocky outcrop habitat the plant is known to inhabit is within the Project Area. The reference site was visited, and the plant was observed to determine whether the special status plant is identifiable at this time of year and to obtain a visual image of the Santa Susana tarplant, associated habitat, and associated natural community (Maps – Reference Site, and Photos E and F). The native shrub was present at the reference site and was in bloom. The reference site is within the Santa Susana Pass State Historic Park located .75 miles east of the Mattingly Trail which begins at the Lilac Lane trailhead located at 7700 Lilac Lane, Simi Valley, CA 93063.

3.0 Results

3.1 Field Survey Results

Santa Susana tarplant was not found within the survey area, however two individuals were observed through binoculars in the rocky outcrops north of the site, estimated at distances of 150 feet and 130 feet from the proposed pipeline. No large rock outcrops were present within survey area, however, there were several smaller boulders as well as an area of apparent sandstone bedrock at ground level. These areas had potential to support the tarplant, but none were observed.

The alignment of the pipeline generally fell along the roadbed and into the adjacent ruderal areas. These places would be unlikely to support any special status plant species due to the severely degraded habitat. Small sections of the line passed through oak woodland and relatively undisturbed coastal sage scrub; however, no rare plants were observed in these areas during the survey.

Winter and spring rainfall was above average in 2019 in southern California, so there were high levels of germination and growth during the growing season. Due to the summer timing of the survey, early season annual species were generally not observed. Most perennials and shrubs were still highly visible and/or blooming. Geophytes such as Calochortus species would generally have been past blooming and detectability would be poor, though their stems and seed pods could still be present.

4.0 Summary

Based on a review of literature and site assessments, the Project Area has high potential suitability for one statewide rare plant species, the Santa Susana tarplant. A protocol-level survey was conducted in July 2019 during the peak blooming period for the tarplant. This species was not observed within the project area but was found to occur 130-150 feet north of

the proposed pipeline. Based on this distance, there is likely to be no direct or indirect effects on this species due to the project activities. Seven other special status plants were identified as having potential to occur within the project site, but none were observed during the survey.

5.0 References

[CDFG] California Department of Fish and Game. 2009. Protocols for Surveying and Evaluating Impacts to Rare Native Plant Populations and Natural Communities. State of California, California Natural Resources Agency, California Department of Fish and Game, Sacramento. November.

[CDFG] California Department of Fish and Game. 2000. Guidelines for Assessing the Effects of Proposed Projects on Rare, Threatened, and Endangered Plants and Natural Communities. State of California, The Resources Agency, California Department of Fish and Game, Sacramento. May.

[CDFW] California Department of Fish and Wildlife. 2019. California Natural Diversity Database. California Department of Fish and Wildlife. Biogeographic Data Branch, Vegetation Classification and Mapping Program, Sacramento, California. Available online at: http://www.dfg.ca.gov/biogeodata/cnddb/mapsanddata.asp; most recently accessed: July 2019.

[CNPS] California Native Plant Society. 2001. CNPS Botanical Survey Guidelines. Sacramento, California. Available online at: http://cnps.org/cnps/rareplants/pdf/cnps_survey_guidelines.pdf; most recently accessed: July 2017.

[CNPS] California Native Plant Society. 2019a. Inventory of Rare and Endangered Plants (online edition, v8-02). Sacramento, California. Online at: http://rareplants.cnps.org/; most recently accessed: July 2019.

[CSRL] California Soil Resources Lab. 2019. Online Soil Survey. Online at: http://casoilresource.lawr.ucdavis.edu/drupal. Accessed: July 2019.

Holland, R. F. 1986. Preliminary Descriptions of the Terrestrial Natural Communities of California. Sacramento, California.

Jepson Flora Project (eds.). 2019. Jepson eFlora. Available online at: http://ucjeps.berkeley.edu/IJM.html; most recently accessed: July 2019.

Lichvar, R.W., D.L. Banks, W.N. Kirchner, and N.C. Melvin. 2016. The National Wetland Plant List: 2016 wetland ratings. Phytoneuron 2016-30: 1-17. Published 28 April 2016. ISSN 2153 733X.

[NRCS] Natural Resource Conservation Service. 2019. Web Soil Survey. Online at: https://websoilsurvey.sc.egov.usda.gov/App/HomePage.htm. Accessed July 2019.

[USFWS] United States Fish and Wildlife Service. 1996. Guidelines for Conducting and Reporting Botanical Inventories for Federally Listed, Proposed, and Candidate Plants. Sacramento Fish and Wildlife Office. September.

Appendix A – Maps

Project Area

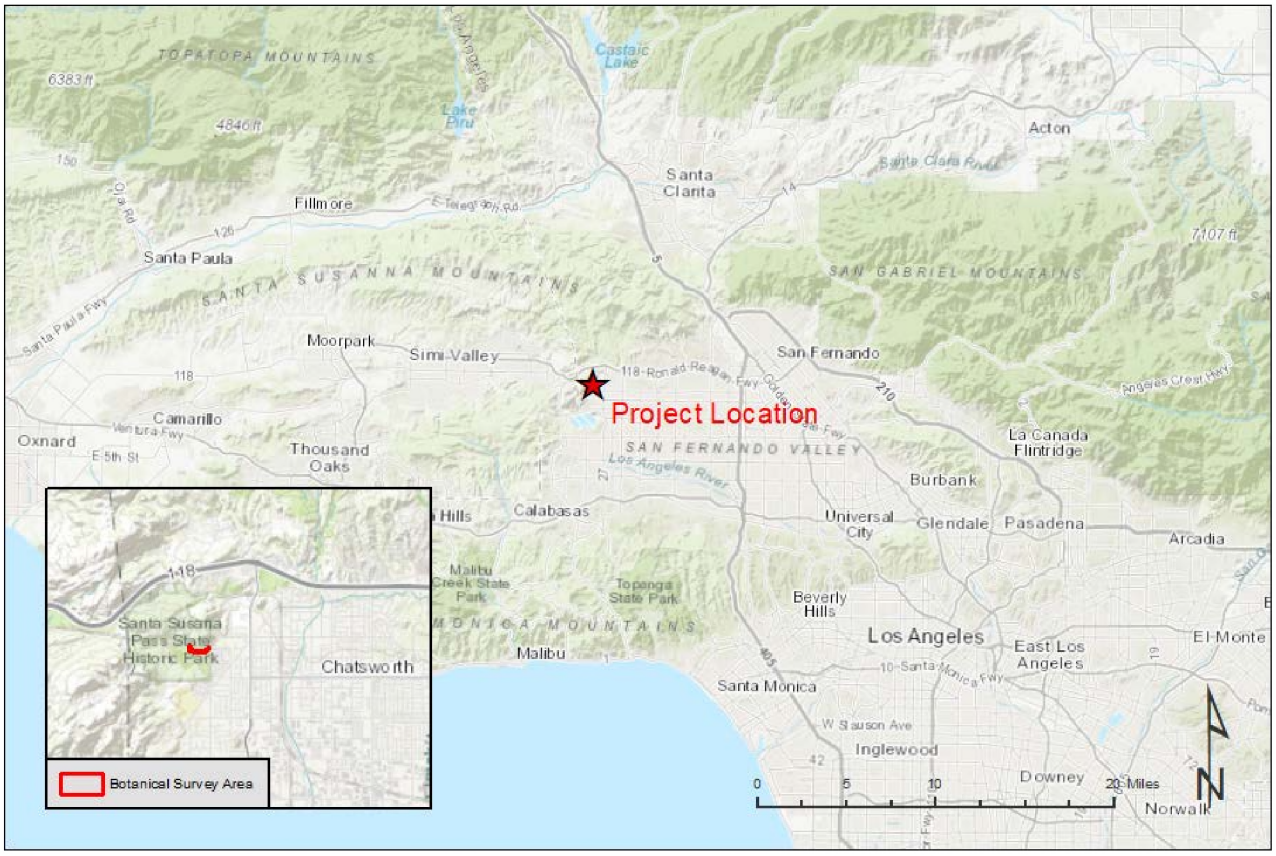

Survey Area



Vegetation Communities

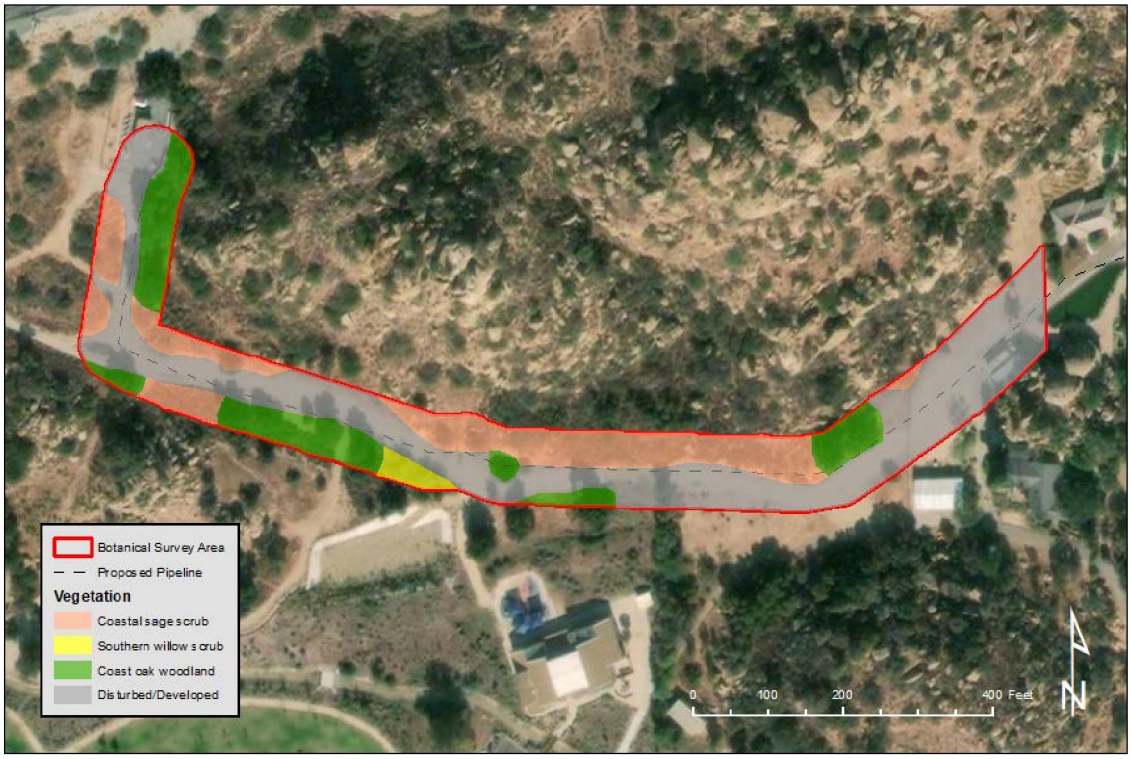

Soils



Reference Site



Appendix B – List of Species Observed in the Project Area

Family	Species	Common Name	Nativity
Adoxaceae			
	Sambucus nigra subsp. caerulea	Mexican elderberry	Native
Agavaceae			
	Hesperoyucca whipplei	Chaparral yucca	Native
Anacardiaceae			
	Malosma laurina	Laurel sumac	Native
	Toxicodendron diversilobum	Pacific poison oak	Native
Apocynaceae			
	Asclepias fascicularis	Mexican whorled milkweed	Native
Asteraceae			
	Ambrosia psilostachya	Cuman ragweed	Native
	Artemisia californica	Coastal sagebrush	Native
	Baccharis pilularis	Coyotebrush	Native
	Baccharis salicifolia subsp. salicifolia	Mule fat	Native
	Carduus pycnocephalus subsp. pycnocephalus	Italian thistle	Naturalized
	Centaurea melitensis	Maltese star-thistle	Naturalized
	Corethrogyne filaginifolia	California aster	Native
	Deinandra fasciculata	Clustered tarweed	Native
	Encelia farinosa	Brittlebush	Native
	Ericameria palmeri	Palmer's goldenbush	Native
	Erigeron bonariensis	Asthmaweed	Naturalized
	Erigeron canadensis	Canadian horseweed	Native
	Eriophyllum confertiflorum	Golden-yarrow	Native
	Hazardia squarrosa	Sawtooth goldenbush	Native
	Heterotheca grandiflora	Telegraphweed	Native
	Lactuca serriola	Prickly lettuce	Naturalized
	Pseudognaphalium biolettii	Two-color rabbit-tobacco	Native
	Pseudognaphalium californicum	Ladies' tobacco	Native
	Stephanomeria virgata subsp. pleurocarpa		Native
	Venegasia carpesioides	Canyon sunflower	Native
Boraginaceae			
	Eucrypta chrysanthemifolia	Spotted hideseed	Native
	Phacelia cicutaria	Caterpillar phacelia	Native
	Phacelia ramosissima	Branching phacelia	Native
Brassicaceae			
	Hirschfeldia incana	Shortpod mustard	Naturalized
Chenopodiaceae			
	Chenopodium sp.	Goosefoot	need info
	Chenopodium murale	Nettleleaf goosefoot	Naturalized
	Salsola tragus	Prickly Russian thistle	Naturalized

Family	Species	Common Name	Nativity
Cucurbitaceae			
	Marah macrocarpa	Cucamonga manroot	Native
Euphorbiaceae			
	Chamaesyce maculata	Spotted sandmat	Naturalized
	Chamaesyce serpyllifolia	Thymeleaf sandmat	Native
	Croton setigerus	Dove weed	Native
Fabaceae			
	Acmispon americanus var. americanus	Spanish clover	Native
	Acmispon glaber	Common deerweed	Native
	Lupinus hirsutissimus	Stinging annual lupine	Native
	Melilotus indicus	Sourclover	Naturalized
Fagaceae			
	Quercus agrifolia	California live oak	Native
	Quercus ilex	Holly oak	Naturalized
Geraniaceae			
	Erodium cicutarium	Redstem stork's bill	Naturalized
Grossulariaceae			
	Ribes malvaceum	Chaparral currant	Native
Juncaceae			
	Juncus sp.	Rush	need info
Lamiaceae			
	Marrubium vulgare	Horehound	Naturalized
	Salvia apiana	White sage	Native
	Salvia mellifera	Black sage	Native
Malvaceae			
	Malacothamnus fasciculatus	Mendocino bushmallow	Native
Myrsinaceae			
	Anagallis arvensis	Scarlet pimpernel	Naturalized
Myrtaceae			
	Eucalyptus sp.	Gum	Naturalized
Nyctaginaceae			
	Mirabilis laevis var. crassifolia	California four o'clock	Native
Onagraceae			
	Camissoniopsis sp.		Native
	Clarkia unguiculata	Elegant clarkia	Native
Papaveraceae			
	Eschscholzia californica	California poppy	Native
Pinaceae			
	Pinus canariensis	Canary Island pine	Naturalized
Poaceae			
	Avena barbata	Lopsided oat	Naturalized
	Bromus madritensis subsp. rubens	Red brome	Naturalized
	Cynodon dactylon	Bermudagrass	Naturalized
	Dactylis glomerata	Orchardgrass	Naturalized
	Festuca arundinacea	Tall fescue	Naturalized

Family	Species	Common Name	Nativity
	Muhlenbergia rigens	Deergrass	Native
	Pennisetum setaceum	Crimson fountaingrass	Naturalized
	Stipa cernua	Nodding needlegrass	Native
	Stipa miliacea var. miliacea	Smilograss	Naturalized
Polemoniaceae			
	Eriastrum sapphirinum	Sapphire woollystar	Native
Polygonaceae			
	Eriogonum fasciculatum	Eastern Mojave buckwheat	Native
Rhamnaceae			
	Rhamnus ilicifolia	Hollyleaf redberry	Native
Salicaceae			
	Salix lasiolepis	Arroyo willow	Native
Solanaceae			
	Datura wrightii	Sacred thorn-apple	Native
	Nicotiana glauca	Tree tobacco	Naturalized
	Solanum americanum	American black nightshade	Native
	Solanum douglasii	Greenspot nightshade	Native
	Solanum xanti	Chaparral nightshade	Native
Verbenaceae			
	Verbena lasiostachys	Western vervain	Native

Appendix C – Representative Photos of the Project Area



Photo A, facing south, showing survey markers for proposed trenching of the pipeline.



Photo B, facing east, showing non-native vegetation alongside of access road, rock outcropping south of the road, and mature coast live oaks (*Quercus agrifolia*) west of the road.



Photo C, facing west, showing plants found in a Coastal Sage Scrub vegetation community.



Photo D, facing east, showing rock outcrops at the edge of the Project Area.



Photo E showing a Santa Susana tarplant at the reference site.



Photo F showing a close-up of the leaves and flowers of the Santa Susana tarplant.

Appendix D – Restoration Notes

Rare plants or rare vegetation communities were not found within the survey area. The pipeline trenching will occur along, and within, the unvegetated dirt road with most adjacent areas entirely composed of non-native vegetation. Several areas along the alignment, within the Santa Susana Pass Historic Park, are near native trees and shrubs. JTL Consultants has a prepared a Protected Tree Report outlining how protective fencing will be placed around the native trees to prevent damage from construction activity. Restoration measures should be taken to reduce the spread of non-native seeds and plants within the project area and to reduce damage to native plants. These measures include:

- Conducting trenching when non-native plant seeds are not viable, usually in the summer and autumn months.
- Removing non-native plants, either manually or by chemical treatment, two feet from either side of the dirt road during the season before trenching begins.
- Parking vehicles, equipment, and placing materials on the dirt road, not along the sides of the road.